Pilot Operated Relief Valves

These valves protect the hydraulic system from excessive pressure, and can be used to maintain constant pressure in a hydraulic system. Remote control and unloading are permitted by using vent circuits.

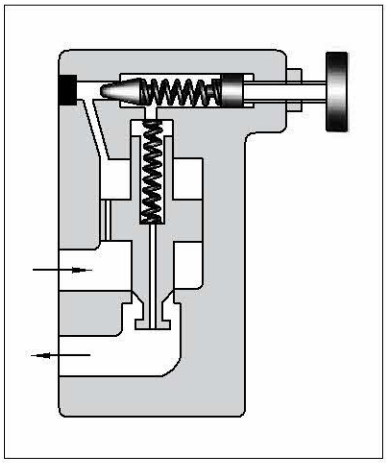

Graphic Symbols

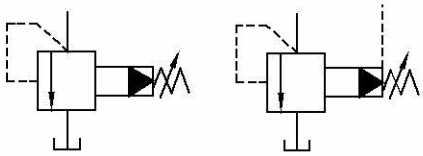

Vent Connection

Specifications

Model Numbers		Max. Operating Pressure MPa (PSI)	Pres. Adj. Range MPa (PSI)	Max. Flow L/min (U.S.GPM)	Approx. Mass kg (lbs.)	
Threaded Connection	Sub-plate Mounting				BT type	BG type
BT-03-*-32*	BG-03-*-32*	25 (3630)	Note) ★-25 (★-3630)	100 (26.4)	5.0 (11.0)	4.7 (10.4)
BT-06-*-32*	BG-06-*-32*			200 (52.8)	5.0 (11.0)	5.6 (12.3)
BT-10-*-32*	BG-10-*-32*			400 (106)	8.5 (18.7)	8.7 (19.2)

Note: Refer to the Minimum adjustment Pressure characteristics on page 214.

Model Number Designation

F-	B	T	-03	-V	-32	*
Special Seals	Series Number	Type of Mounting	Valve Size	High Venting★ Pres. Feature	Design Number	Design Standards
F: Special Seals for Phosphate Ester Type Fluids (Omit if not required)	**B:** Pilot Operated Relief Valves	**T:** Threaded Connection	**03**	**V:** For High Venting Pressure Feature (Omit if not required)	**32**	**None:** Japanese Std. "JIS" **80:** European Design Std. **90:** N. American Design Std.
			06		**32**	
			10		**32**	
		G: Sub-plate Mounting	**03**		**32**	**None:** Japanese Std. "JIS" and European Design Std. **90:** N. American Design Std.
			06		**32**	
			10		**32**	

★Use high venting pressure type to reduce the response time from unload to onload.

Attachment

Mounting Bolts

Valve Model Numbers	Socket Head Cap Screw	
	Japanese Std. "JIS" and European Design Std.	N. American Design Std.
BG-03	M12 × 70 Lg. (2 pcs.), M12 × 95 Lg. (2 pcs.)	1/2-13UNC × 2-3/4 Lg. (2 pcs.), 1/2-13UNC × 3-3/4 Lg. (2 pcs.)
BG-06	M16 × 60 Lg. (2 pcs.), M16 × 80 Lg. (2 pcs.)	5/8-11UNC × 2-1/4 Lg. (2 pcs.), 5/8-11UNC × 3-1/4 Lg. (2 pcs.)
BG-10	M20 × 70 Lg. (2 pcs.), M20 × 90 Lg. (2 pcs.)	3/4-10UNC × 2-3/4 Lg. (2 pcs.), 3/4-10UNC × 3-1/2 Lg. (2 pcs.)

Sub-plate

Valve Model Numbers	Japanese Standard "JIS"		European Design Standard		N. American Design Standard		Approx. Mass kg (lbs.)
	Sub-plate Model Numbers	Thread Size	Sub-plate Model Numbers	Thread Size	Sub-plate Model Numbers	Thread Size	
BG-03	BGM-03-20	Rc 3/8	BGM-03-3080	3/8 BSP.F	BGM-03-2090	3/8 NPT	2.4(5.3)
	BGM-03X-20	Rc 1/2	BGM-03X-3080	1/2 BSP.F	BGM-03X-2090	1/2 NPT	3.1(6.8)
BG-06	BGM-06-20	Rc 3/4	BGM-06-3080	3/4 BSP.F	BGM-06-2090	3/4 NPT	4.7(10.4)
	BGM-06X-20	Rc 1	BGM-06X-3080	1 BSP.F	BGM-06X-2090	1 NPT	5.7(12.6)
BG-10	BGM-10-20	Rc 1-1/4	BGM-10-3080	1-1/4 BSP.F	BGM-10-2090	1-1/4 NPT	8.4(18.5)
	BGM-10X-20	Rc 1-1/2	BGM-10X-3080	1-1/2 BSP.F	BGM-10X-2090	1-1/2 NPT	10.3(22.7)

- Sub-plates are available. Specify the sub-plate model number from the table above. When sub-plates are not used, the mounting surface should have a good machined finish.

Instructions

- If a remote control relief valve is used in the vent circuit, see page 203. In addition, if the internal volume of the vent line is too large, chattering is likely to occur. Thus, as far as possible reduce the inside diametre and the length of the pipe.
- To adjust the pressure, loosen the lock nut and turn the handle slowly clockwise for higher pressures or anti-clockwise for lower pressures. After adjustments, do not forget to tighten the lock nut.
- Piping of the tank line should not be connected to any tank line of the other valves, but connected directly to the reservoir.
- Pressure is limited by collars fitted. If a working pressure cannot be attained, remove some collars. One collar is equivalent to 10 MPa (1450 PSI).
- With a small flow, the setting pressure may be unstable. Use models numbered 03 and 06 with a flow rate above 8 L/min (2.1 U.S. GPM) and model 10 with 15 L/min (4.0 U.S. GPM).

BT-03-✻-32/3280/3290
BT-06-✻-32/3280/3290
BT-10-✻-32/3280/3290

DIMENSIONS IN MILLIMETRES (INCHES)

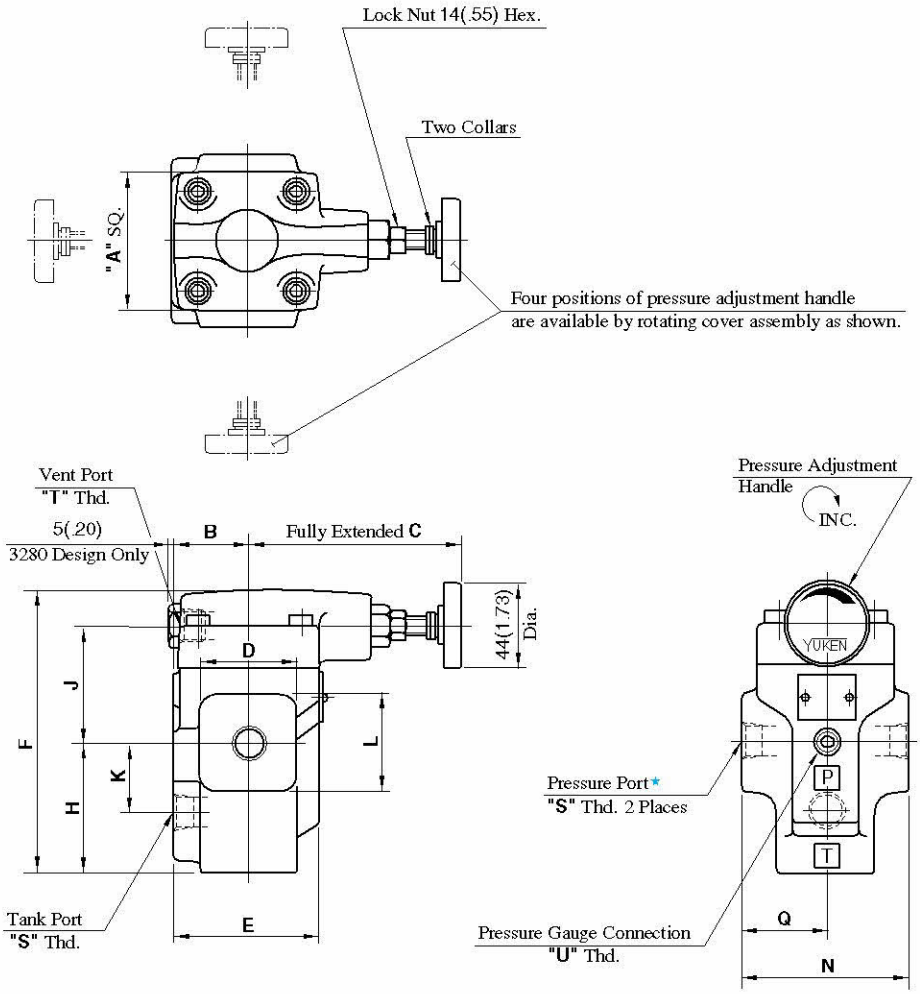

★ There are two threaded connection pressure ports. They can be connected each other in-line; one as inlet and the other as an outlet or the valve can be used by plugging one of the pressure ports.

Model Numbers	Dimensions mm (Inches)											
	A	B	C	D	E	F	H	J	K	L	N	Q
BT-03-✻-32/3280/3290 BT-06-✻-32/3280/3290	75 (2.95)	40 (1.57)	105 (4.13)	52 (2.05)	78 (3.07)	150.5 (5.93)	68.5 (2.70)	62 (2.44)	36 (1.42)	52 (2.05)	90 (3.54)	45 (1.77)
BT-10-✻-32/3280/3290	85 (3.35)	50 (1.97)	101 (3.98)	80 (3.15)	96 (3.78)	183 (7.20)	89 (3.50)	74 (2.91)	49 (1.93)	80 (3.15)	120 (4.72)	60 (2.36)

Model Numbers	Thread Size		
	"S" Thd.	"T" Thd.	"U" Thd.
BT-03-✻-32	Rc 3/8	Rc 3/8	Rc 1/4
BT-03-✻-3280	3/8 BSP.F	3/8 BSP.F	1/4 BSP.Tr
BT-03-✻-3290	3/8 NPT	3/8 NPT	1/4 NPT
BT-06-✻-32	Rc 3/4	Rc 3/8	Rc 1/4
BT-06-✻-3280	3/4 BSP.F	3/8 BSP.F	1/4 BSP.Tr
BT-06-✻-3290	3/4 NPT	3/8 NPT	1/4 NPT
BT-10-✻-32	Rc 1-1/4	Rc 3/8	Rc 1/4
BT-10-✻-3280	1-1/4 BSP.F	3/8 BSP.F	1/4 BSP.Tr
BT-10-✻-3290	1-1/4 NPT	3/8 NPT	1/4 NPT

BG-03-✻-32/3290
BG-06-✻-32/3290
BG-10-✻-32/3290

DIMENSIONS IN MILLIMETRES (INCHES)

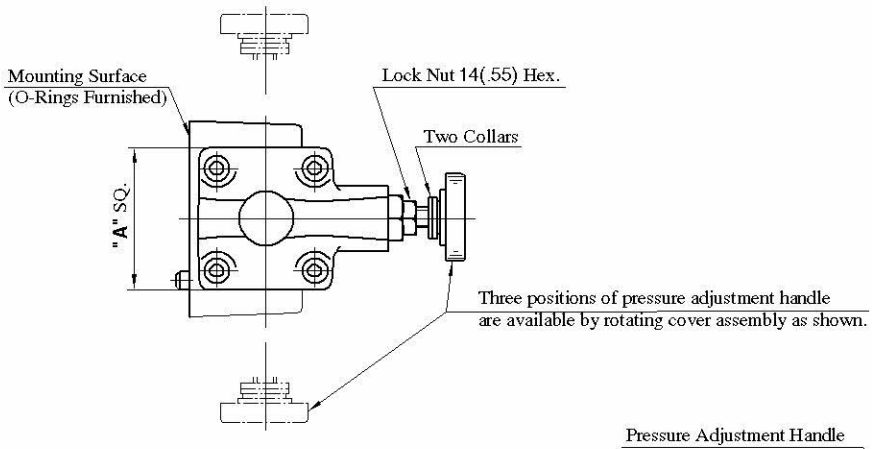

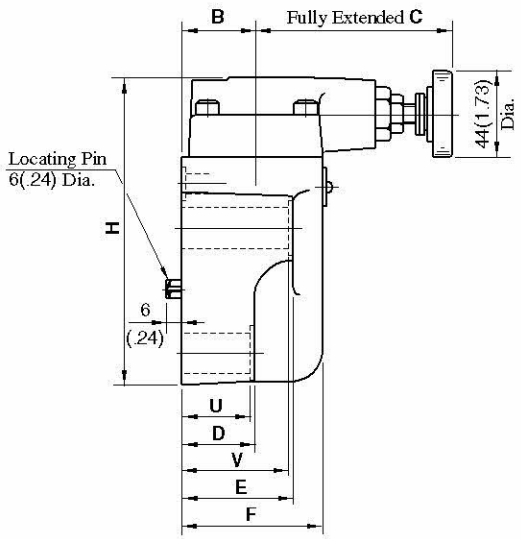

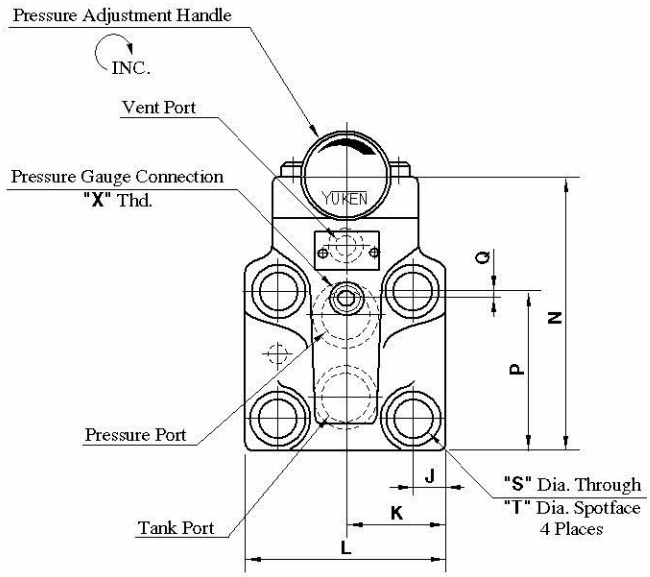

Model Numbers	Dimensions mm (Inches)																
	A	B	C	D	E	F	H	J	K	L	N	P	Q	S	T	U	V
BG-03-✻-32/3290	75 (2.95)	40 (1.57)	105 (4.13)	57 (2.24)	78 (3.07)	78 (3.07)	137 (5.39)	14.1 (.56)	41 (1.61)	82 (3.23)	117 (4.61)	77 (3.03)	22 (.87)	13.5 (.53)	21 (.83)	55 (2.17)	77 (3.03)
BG-06-✻-32/3290	75 (2.95)	40 (1.57)	105 (4.13)	40 (1.57)	60 (2.36)	78 (3.07)	161 (6.34)	17 (.67)	52 (2.05)	104 (4.09)	141 (5.55)	83.5 (3.29)	4.5 (.18)	17.5 (.69)	26 (1.02)	38 (1.50)	58 (2.28)
BG-10-✻-32/3290	85 (3.35)	45 (1.77)	101 (3.98)	47 (1.85)	67 (2.64)	87.5 (3.44)	195 (7.68)	20.7 (.81)	62 (2.44)	124 (4.88)	175 (6.89)	110 (4.33)	6 (.24)	21.5 (.85)	32 (1.26)	45 (1.77)	65 (2.56)

Model Numbers	Thread Size "X" Thd	Mounting Surface
BG-03-✻-32	Rc 1/4 = 1/4 BSP.Tr	ISO 6264-AR-06-2-A
BG-03-✻-3290	1/4 NPT	
BG-06-✻-32	Rc 1/4 = 1/4 BSP.Tr	ISO 6264-AS-08-2-A
BG-06-✻-3290	1/4 NPT	
BG-10-✻-32	Rc 1/4 = 1/4 BSP.Tr	ISO 6264-AT-10-2-A
BG-10-✻-3290	1/4 NPT	

BGM-03,03X-20 / 3080 / 2090
BGM-06,06X-20 / 3080 / 2090
BGM-10,10X-20 / 3080 / 2090

DIMENSIONS IN MILLIMETRES (INCHES)

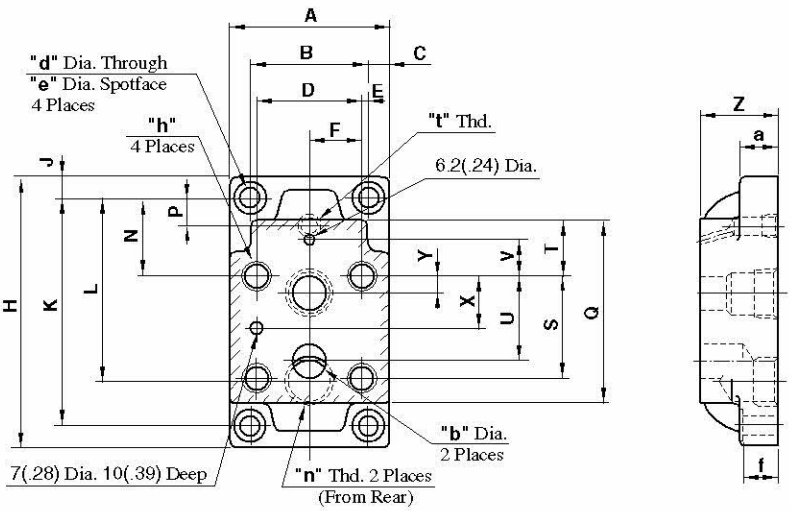

Model Numbers	Dimensions mm (Inches)													
	A	B	C	D	E	F	H	J	K	L	N	P	Q	S
BGM-03	86 (3.39)	60 (2.36)	13 (.51)	53.8 (2.12)	3.1 (.12)	26.9 (1.06)	149 (5.87)	13 (.51)	123 (4.84)	86 (3.39)	32 (1.26)	26 (1.02)	97 (3.82)	53.8 (2.12)
BGM-03X										95 (3.74)		21 (.83)		
BGM-06	108 (4.25)	78 (3.07)	15 (.59)	70 (2.76)	4 (.16)	35 (1.38)	180 (7.09)	15 (.59)	150 (5.91)	106.5 (4.19)	51 (2.01)	27.2 (1.07)	121 (4.76)	66.7 (2.63)
BGM-06X										119 (4.69)		18 (.71)		
BGM-10	126 (4.96)	94 (3.70)	16 (.63)	82.6 (3.25)	5.7 (.22)	41.3 (1.63)	227 (8.94)	16 (.63)	195 (7.68)	138.2 (5.44)	62 (2.44)	30.2 (1.19)	154 (6.06)	88.9 (3.50)
BGM-10X										158 (6.22)		17 (.67)		

Model Numbers	Dimensions mm (Inches)										
	T	U	V	X	Y	Z	a	b	d	e	f
BGM-03	19 (.75)	47.4 (1.87)	0 (0)	22 (.87)	22 (.87)	32 (1.26)	20 (.79)	14.5 (.57)	11 (.43)	17.5 (.69)	19 (.75)
BGM-03X						40 (1.57)					
BGM-06	37 (1.46)	55.5 (2.19)	23.8 (.94)	33.4 (1.31)	11 (.43)	40 (1.57)	25 (.98)	23 (.91)	13.5 (.53)	21 (.83)	24 (.94)
BGM-06X						50 (1.97)					
BGM-10	42 (1.65)	76.2 (3.00)	31.8 (1.25)	44.5 (1.75)	12.7 (.50)	50 (1.97)	32 (1.26)	28 (1.10)	17.5 (.69)	26 (1.02)	31 (1.22)
BGM-10X						63 (2.48)					

Model Numbers	Japanese Standard "JIS" Design "20"			European Design Standard Design "3080"			N. American Design Standard Design "2090"		
	"h"	"n" Thd.	"t" Thd.	"h"	"n" Thd.	"t" Thd.	"h"	"n" Thd.	"t" Thd.
BGM-03	M12 Thd. 20(.79) Deep	Rc 3/8	Rc 1/4	M12 Thd. 20(.79) Deep	3/8 BSP.F	1/4 BSP.F	1/2-13UNC Thd. 22(.87) Deep	3/8 NPT	1/4 NPT
BGM-03X		Rc 1/2			1/2 BSP.F			1/2 NPT	
BGM-06	M16 Thd. 25(.98) Deep	Rc 3/4		M16 Thd. 25(.98) Deep	3/4 BSP. F		5/8-11UNC Thd. 27(1.06) Deep	3/4 NPT	
BGM-06X		Rc 1			1 BSP.F			1 NPT	
BGM-10	M20 Thd. 28(1.10) Deep	Rc1-1/4		M20 Thd. 28(1.10) Deep	1-1/4 BSP.F		3/4-10UNC Thd. 28(1.10) Deep	1-1/4 NPT	
BGM-10X		Rc 1-1/2			1-1/2 BSP.F			1-1/2 NPT	

Nominal Override Characteristics

Hydraulic fluid: Viscosity : 35 mm²/s (164 SSU)
Specific Gravity : 0.850

BT-03, BG-03

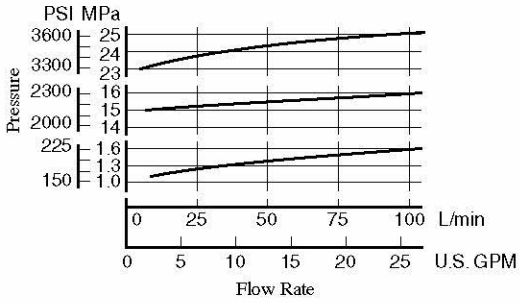

BT-06, BG-06

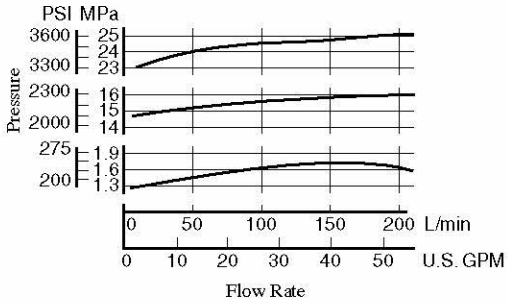

BT-10, BG-10

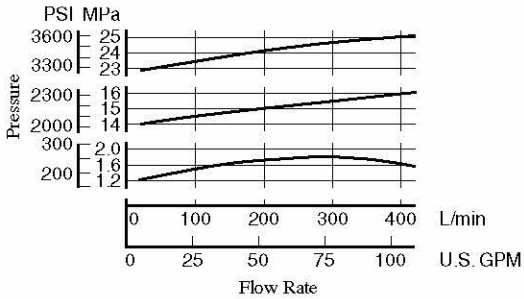

Min. Adj. Pressure & Vent Pressure vs. Flow

Hydraulic fluid: Viscosity : 35 mm²/s (164 SSU)
Specific Gravity : 0.850

BT-03, BG-03

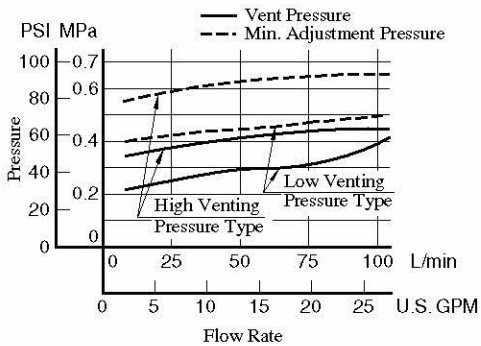

BT-06, BG-06

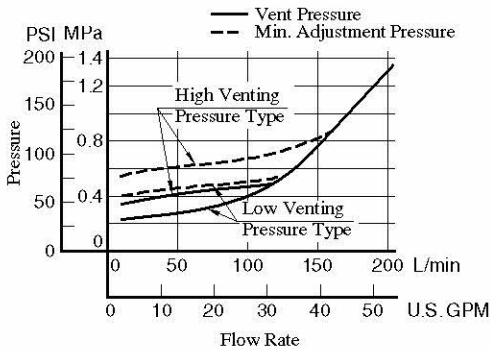

BT-10, BG-10

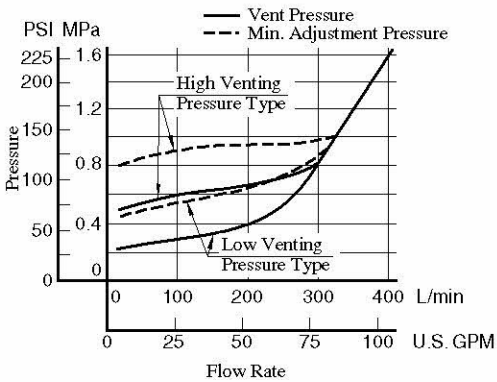

Spare Parts List

BT-03-✻-32/3280/3290
BT-06-✻-32/3280/3290
BT-10-✻-32/3280/3290

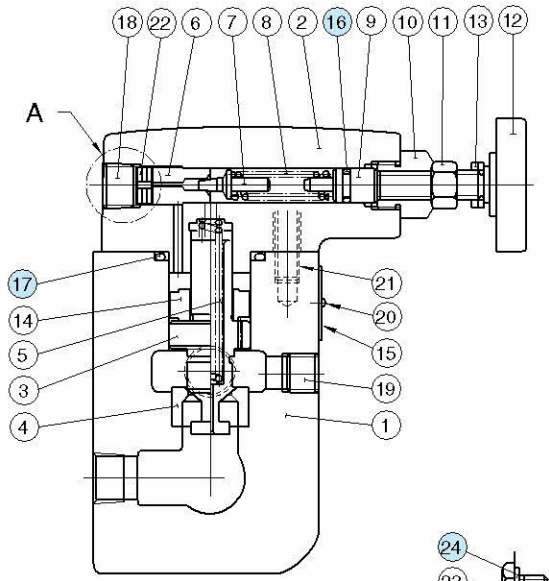

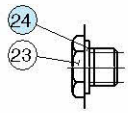

Section "A"
for Design 3280

List of Seals

Item	Name of Parts	Part Numbers			Qty.
		BT-03	BT-06	BT-10	
16	O-Ring	SO-NA-P9		SO-NA-P9	1
17	O-Ring	SO-NB-P32		SO-NB-P42	1
24	Bonded Seal	SG-FB-3/8		SG-FB-3/8	1

Note: When ordering the seals, please specify the seal kit number from the table below.

List of Seal Kits

Valve Model Numbers	Seal Kit Numbers
BT-03	KS-BT-03-32
BT-06	
BT-10	KS-BT-10-32

Note: No bonded seals are included in the seal kits.

BG-03-✻-32/3290
BG-06-✻-32/3290
BG-10-✻-32/3290

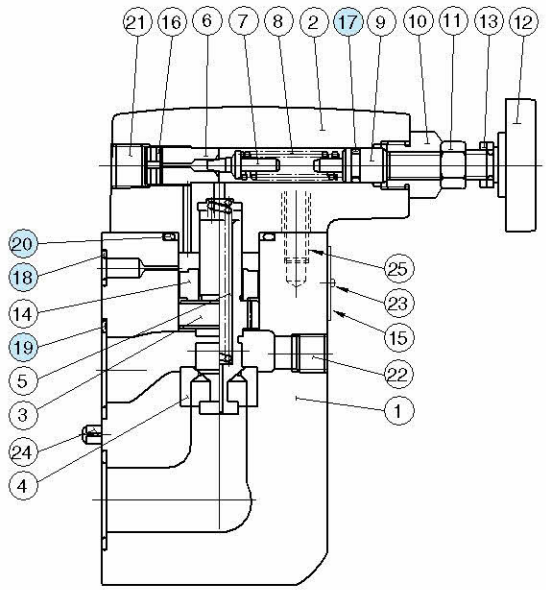

List of Seals

Item	Name of Parts	Part Numbers			Qty.
		BG-03	BG-06	BG-10	
17	O-Ring	SO-NA-P9	SO-NA-P9	SO-NA-P9	1
18	O-Ring	SO-NB-P9	SO-NB-P11	SO-NB-P9	1
19	O-Ring	SO-NB-P18	SO-NB-P28	SO-NB-P32	2
20	O-Ring	SO-NB-P32	SO-NB-P32	SO-NB-P42	1

Note: When ordering the seals, please specify the seal kit number from the table below.

List of Seal Kits

Valve Model Numbers	Seal Kit Numbers
BG-03	KS-BG-03-32
BG-06	KS-BG-06-32
BG-10	KS-BG-10-32

Low Noise Type Pilot Operated Relief Valves

Pilot operated relief valves here have been particularly developed as low-noise types. Able to protect pumps and control valves against excessive pressures, they are used to control the pressure in the hydraulic system to a constant level. Remote control and unloading are permitted by using vent circuits.

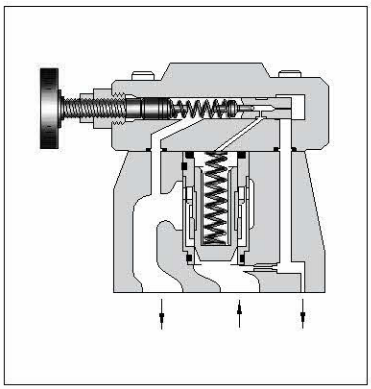

Graphic Symbols

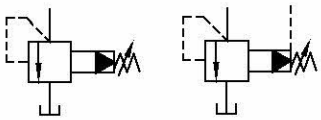

Vent Connection

Specifications

Model Numbers	Max. Operating Pressure MPa (PSI)	Pres. Adj. Range MPa (PSI)	Max. Flow L/min (U.S.GPM)	Approx. Mass kg (lbs.)
S-BG-03-∗-∗-40∗	25 (3630)	Note) ★-25 (★-3630)	100 (26.4)	4.1 (9.0)
S-BG-06-∗-∗-40∗			200 (52.8)	5.0 (11.0)
S-BG-10-∗-40∗			400 (106)	10.5 (23.2)

Note: See minimum adjustment pressure characteristics on page 218.

Model Number Designation

F-	S-	B	G	-03	-V	-L	-40	∗
Special Seals	Low Noise Type	Series Number	Type of Mounting	Valve Size	High Venting ★1 Pres. Feature	Direction of Handle	Design Number	Design Std.
F: Special Seals for Phosphate Ester Type Fluids (Omit if not required)	**S:** Low Noise Type	**B:** Pilot Operated Relief Valves	**G:** Sub-plate Mounting	**03**	**V:** For High Venting Pressure Feature (Omit if not required)	(Viewed from pressure gauge connection) **L:** Left (Normal) **R:** Right	**40**	Refer to ★2
				06			**40**	
				10		————	**40**	

★1. Use the high venting pressure type where it is necessary to reduce the response time from unloading to onloading.

★2. Design Standards: None ..... Japanese Standard "JIS" and European Design Standard
90 ..... N. American Design Standard

Sub-plate

Valve Model Numbers	Japanese Standard "JIS"		European Design Standard		N. American Design Standard		Approx. Mass kg (lbs.)
	Sub-plate Model Numbers	Thread Size	Sub-plate Model Numbers	Thread Size	Sub-plate Model Numbers	Thread Size	
S-BG-03	BGM-03-20	Rc 3/8	BGM-03-3080	3/8 BSP.F	BGM-03-2090	3/8 NPT	2.4 (5.3)
	BGM-03X-20	Rc 1/2	BGM-03X-3080	1/2 BSP.F	BGM-03X-2090	1/2 NPT	3.1 (6.8)
S-BG-06	BGM-06-20	Rc 3/4	BGM-06-3080	3/4 BSP.F	BGM-06-2090	3/4 NPT	4.7 (10.4)
	BGM-06X-20	Rc 1	BGM-06X-3080	1 BSP.F	BGM-06X-2090	1 NPT	5.7 (12.6)
S-BG-10	BGM-10-20	Rc 1-1/4	BGM-10-3080	1-1/4 BSP.F	BGM-10-2090	1-1/4 NPT	8.4 (18.5)
	BGM-10X-20	Rc 1-1/2	BGM-10X-3080	1-1/2 BSP.F	BGM-10X-2090	1-1/2 NPT	10.3 (22.7)

- Sub-plates are available. Specify the sub-plate model number from the table above. When sub-plates are not used, the mounting surface should have a good machined finish.
- The sub-plates are those for pilot operated relief valves. For dimensions, see page 213.

Attachment

Mounting Bolts

Valve Model Numbers	Socket Head Cap Screw		Qty.
	Japanese Std. "JIS" and European Design Std.	N. American Design Std.	
S-BG-03	M12 × 40 Lg.	1/2-13 UNC × 1-1/2 Lg.	4
S-BG-06	M16 × 50 Lg.	5/8-11 UNC × 2 Lg.	4
S-BG-10	M20 × 60 Lg.	3/4-10 UNC × 2-1/4 Lg.	4

Instructions

- If a remote control relief valve is used in the vent circuit, see page 203. In addition, if the internal volume of the vent line is too large, chattering is likely to occur. Thus, as far as possible reduce the inside Dia. and the length of the pipe.
- To adjust the pressure, loosen the lock nut and turn the handle slowly clockwise for higher pressures or anti-clockwise for lower pressures. After adjustments, do not forget to tighten the lock nut.
- Piping of the tank line should not be connected to any tank line of the other valves, but connected directly to the reservoir.
- Pressure is limited by collars fitted. If a working pressure cannot be attained, remove some collars. One collar is equivalent to 10 MPa (1450 PSI).
- With a small flow, the setting pressure may be unstable. Use models numbered 03 and 06 with a flow rate above 5 L/min (1.3 U.S. GPM) and model 10 with 8 L/min (2.1 U.S. GPM).

S-BG-03-✻-L-40/4090
S-BG-06-✻-L-40/4090
S-BG-10-✻-40/4090

DIMENSIONS IN MILLIMETRES (INCHES)

Mounting surface
S-BG-03: ISO 6264-AR-06-2-A
S-BG-06: ISO 6264-AS-08-2-A
S-BG-10: ISO 6264-AT-10-2-A

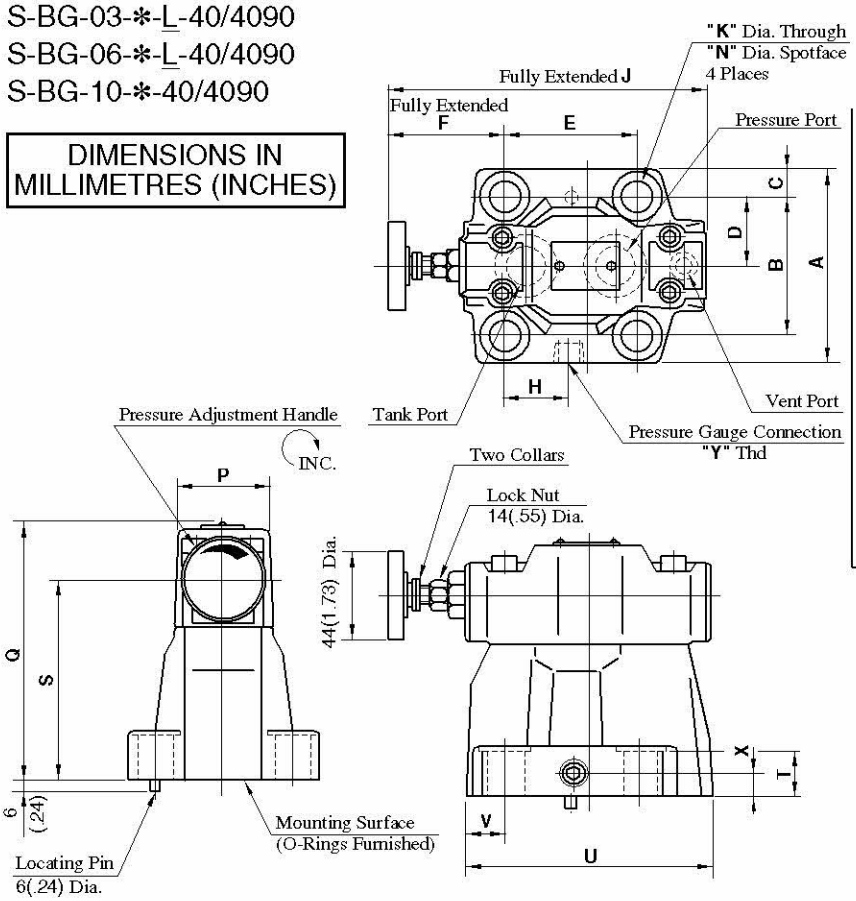

Opposite Handle Position

S-BG-$^{03}_{06}$-✻-R

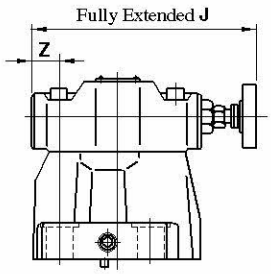

Note: For other dimensions, see the figures shown left.

Note: For dimensions of the valve mounting surface, see the dimensional drawing (P. 213) of the sub-plate used together.

Model Numbers	"Y" Thd.
S-BG-03-✻-✻-40	Rc 1/4 = 1/4 BSP.Tr
S-BG-03-✻-✻-4090	1/4 NPT
S-BG-06-✻-✻-40	Rc 1/4 = 1/4 BSP.Tr
S-BG-06-✻-✻-4090	1/4 NPT
S-BG-10-✻-40	Rc 1/4 = 1/4 BSP.Tr
S-BG-10-✻-4090	1/4 NPT

Model Numbers	Dimensions mm (Inches)																	
	A	B	C	D	E	F	H	J	K	N	P	Q	S	T	U	V	X	Z
S-BG-03	76 (2.99)	53.8 (2.12)	11.1 (.44)	26.9 (1.06)	53.8 (2.12)	73.6 (2.90)	26.9 (1.06)	163.5 (6.44)	13.5 (.53)	21 (.83)	50 (1.97)	130 (5.12)	103 (4.06)	21.5 (.85)	106 (4.17)	26.1 (1.03)	13 (.51)	36.1 (1.42)
S-BG-06	98 (3.86)	70 (2.76)	14 (.55)	35 (1.38)	66.7 (2.63)	58.8 (2.31)	33.7 (1.33)	163.5 (6.44)	17.5 (.69)	26 (1.02)	50 (1.97)	130 (5.12)	103 (4.06)	26 (1.02)	122 (4.80)	19.3 (.76)	13 (.51)	21.3 (.84)
S-BG-10	120 (4.72)	82.6 (3.25)	18.7 (.74)	41.3 (1.63)	88.9 (3.50)	46.1 (1.81)	44.9 (1.77)	180 (7.09)	21.5 (.85)	32 (1.26)	65 (2.56)	167 (6.57)	135 (5.31)	33.5 (1.32)	155 (6.10)	21.1 (.83)	18 (.71)	—

Nominal Override Characteristics

Hydraulic fluid:
Viscosity : 35 mm^2/s (164 SSU)
Specific Gravity : 0.850

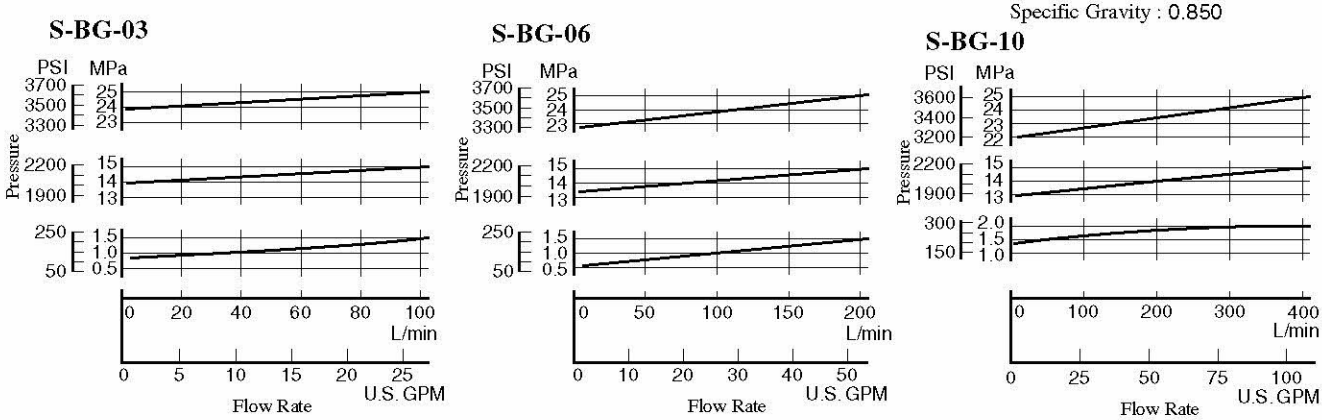

Min. Adj. Pressure and Vent Pressure vs. Flow

Hydraulic fluid:
Viscosity : 35 mm^2/s (164 SSU)
Specific Gravity : 0.850

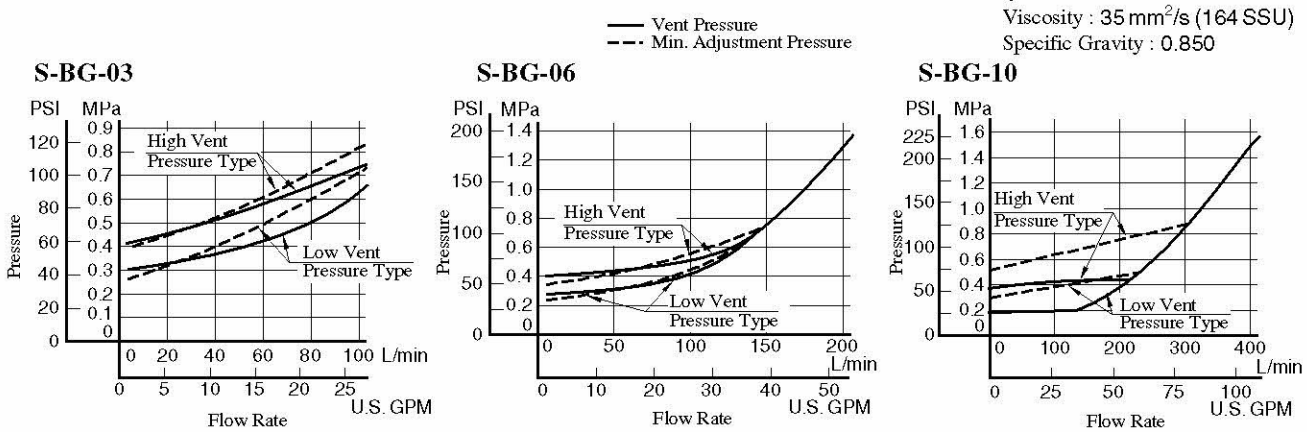

Noise Level

Measuring condition

Measuring position: At 1m (3.3 ft.) back from the valve front.
Viscosity : 35 mm^2/s (164 SSU)
Back pressure : 0.1 MPa (14.5 PSI)

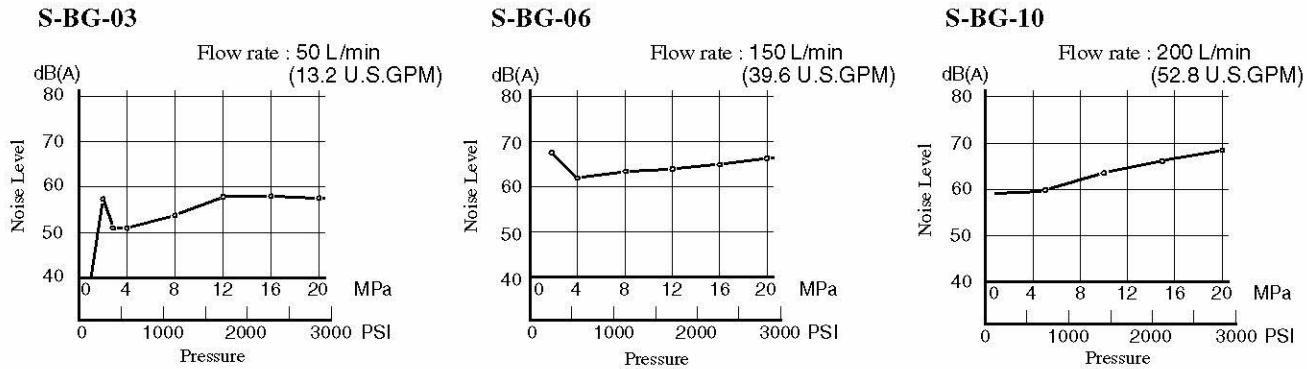

Spare Parts List

S-BG-03,06,10-✻-40/4090

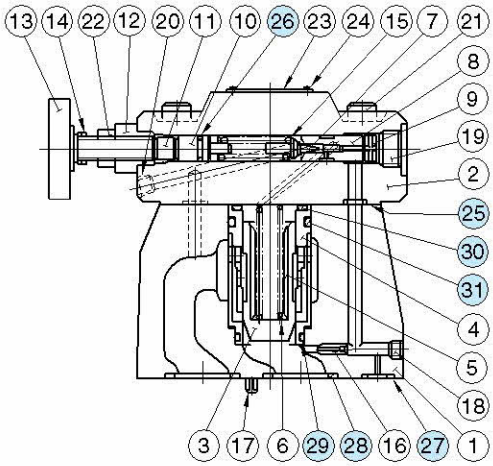

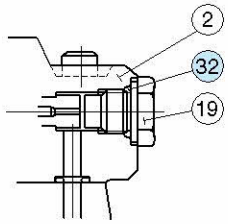

S-BG-10

List of Seals

Item	Name of Parts	Part Numbers			Qty.
		S-BG-03	S-BG-06	S-BG-10	
25	O-Ring	SO-NB-P9	SO-NB-P9	SO-NB-P9	2
26	O-Ring	SO-NA-P9	SO-NA-P9	SO-NA-P9	1
27	O-Ring	SO-NB-P9	SO-NB-P11	SO-NB-P9	1
28	O-Ring	SO-NB-P18	SO-NB-P28	SO-NB-P32	2
29	O-Ring	SO-NB-A024	SO-NB-A024	SO-NB-A128	1
30	O-Ring	SO-NB-P28	SO-NB-P28	SO-NB-P36	1
31	O-Ring	SO-NB-P32	SO-NB-P32	SO-NB-P42	1
32	O-Ring	—	—	SO-NB-P14	1

Note: When ordering the seals, please specify the seal kit number from the table below.

List of Seal Kits

Valve Model Numbers	Seal Kit Numbers
S-BG-03	KS-S-BG-03-40
S-BG-06	KS-S-BG-06-40
S-BG-10	KS-S-BG-10-40

Solenoid Controlled Relief Valves

These valves are a combination of a pilot operated relief valve and a solenoid operated directional valve. Piping between the two is eliminated as the solenoid valve is directly mounted on the relief valve and connected with the relief valve vent. Pump pressure may be unloaded remotely by an electrical signal to the solenoid, or by connecting pilot relief valves to the solenoid valve ports.

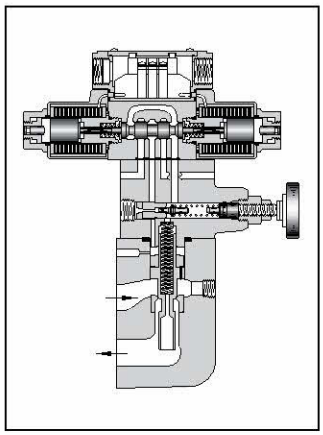

Specifications

Model Numbers		Max. Operating Pressure MPa (PSI)	Pressure Adj. Range MPa (PSI)	Max. Flow L/min (U.S.GPM)	Approx. Mass kg (lbs.) Double Sol.	Single Sol.	With Vent Restrictor
Threaded Connection	BST-03-*-*-*-*-48*	25 (3630)	Note) ★-25 (★-3630)	100 (26.4)	7.1 (15.7)	6.6 (14.6)	7.6 (16.8)
	BST-06-*-*-*-*-48*			200 (52.8)	7.1 (15.7)	6.6 (14.6)	7.6 (16.8)
	BST-10-*-*-*-*-48*			400 (106)	10.8 (23.8)	10.3 (22.7)	11.3 (24.9)
Sub-plate Mounting	BSG-03-*-*-*-*-48*	25 (3630)	Note) ★-25 (★-3630)	100 (26.4)	6.8 (15.0)	6.3 (13.9)	7.3 (16.1)
	BSG-06-*-*-*-*-48*			200 (52.8)	7.7 (17.0)	7.2 (15.9)	8.2 (18.1)
	BSG-10-*-*-*-*-48*			400 (106)	11.0 (24.3)	10.5 (23.2)	11.5 (25.4)

Note: For relief valves, standard pilot operated relief valves are used.
For minimum adjustment pressures and other characteristics, see page 214.

Model Number Designation

F-	A-	BS	T	-03	-V	-2B3A	-A100	-N	-48	*
Special Seals	With Vent Restrictor	Series Number	Type of Mounting	Valve Size	High Venting Pres. Feature	Vent Type	Coil Type★4	Type of Electrical Con.	Design Number	Design Standards
F: Special Seals for Phosphate Ester Type Fluids (Omit if not required)	**A:** With Vent Restrictor★1 (Option-Omit if not required)	**BS:** Solenoid Controlled Relief Valves	**T:** Threaded Connection **G:** Sub-plate Mounting	**03** **06** **10**	**V:** For High Venting Pressure Feature★2 (Omit if not required)	**2B3A**★3 **2B3B** **2B2B** **2B2** **3C2** **3C3**	AC: **A100**, **A120** **A200**, **A240** DC: **D12**, **D24** **D48** AC→DC: **R100**, **R200**	**None:** Terminal Box Type **N:** With Plug-in Connector (DIN)	**48**	**None:** Japanese Std. "JIS" **90:** N. American Design Std. **80:** European Design Std.
								N: With Plug-in Connector (DIN)		

★1. Models with vent restrictor are applicable only for the vent type 2B3A and 2B3B. For details, see page 222.
★2. Use high venting pressure types to reduce response time from unloading to onloading.
★3. For the details of the vent types, see the following page.
★4. The coil codes are the same as for solenoid operated directional valve DSG-01. See the Solenoid Ratings on page 345.

The coil type numbers in the shaded column are handled as optional extras. In case these coils are required to be chosen, please confirm the time of delivery with us before ordering.

Vent Types

Vent Type	Graphic Symbols	Solenoid Operated Directional Valve Model Number	Operation		
			SOL "a"	SOL "b"	Vent Connecting
2B3A	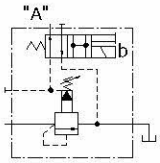	DSG-01-2B3A	—	OFF	Connected to port "A".
				ON	Connected to tank (no-load)
2B3B	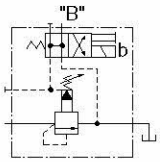	DSG-01-2B3B	—	OFF	Connected to tank (no-load)
				ON	Connected to port "B".
2B2B	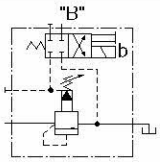	DSG-01-2B2B	—	OFF	Closed state (relief valve setting pressure)
				ON	Connected to port "B".
2B2	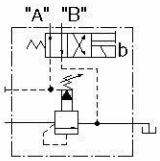	DSG-01-2B2	—	OFF	Connected to port "A".
				ON	Connected to port "B".
3C2	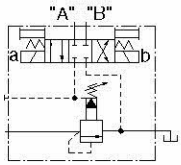	DSG-01-3C2	OFF	OFF	Closed state (relief valve setting pressure)
			ON	OFF	Connected to port "A".
			OFF	ON	Connected to port "B".
3C3	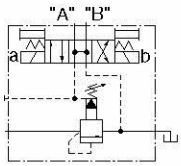	DSG-01-3C3	OFF	OFF	Connected to tank (no-load)
			ON	OFF	Connected to port "A".
			OFF	ON	Connected to port "B".

Attachment

Mounting Bolts

Valve Model Numbers	Socket Head Cap Screw	
	Japanese Std. "JIS" and European Design Std.	N. American Design Std.
BSG-03	M12 × 70 Lg. (2 pcs.), M12 × 95 Lg. (2 pcs.)	1/2-13UNC × 2-3/4 Lg. (2 pcs.), 1/2-13UNC × 3-3/4 Lg. (2 pcs.)
BSG-06	M16 × 60 Lg. (2 pcs.), M16 × 80 Lg. (2 pcs.)	5/8-11UNC × 2-1/4 Lg. (2 pcs.), 5/8-11UNC × 3-1/4 Lg. (2 pcs.)
BSG-10	M20 × 70 Lg. (2 pcs.), M20 × 90 Lg. (2 pcs.)	3/4-10UNC × 2-3/4 Lg. (2 pcs.), 3/4-10UNC × 3-1/2 Lg. (2 pcs.)

Sub-plate

Valve Model Numbers	Japanese Standard "JIS"		European Design Standard		N. American Design Standard		Approx. Mass kg (lbs.)
	Sub-plate Model Numbers	Thread Size	Sub-plate Model Numbers	Thread Size	Sub-plate Model Numbers	Thread Size	
BSG-03	BGM-03-20	Rc 3/8	BGM-03-3080	3/8 BSP.F	BGM-03-2090	3/8 NPT	2.4(5.3)
	BGM-03X-20	Rc 1/2	BGM-03X-3080	1/2 BSP.F	BGM-03X-2090	1/2 NPT	3.1(6.8)
BSG-06	BGM-06-20	Rc 3/4	BGM-06-3080	3/4 BSP.F	BGM-06-2090	3/4 NPT	4.7(10.4)
	BGM-06X-20	Rc 1	BGM-06X-3080	1 BSP.F	BGM-06X-2090	1 NPT	5.7(12.6)
BSG-10	BGM-10-20	Rc 1-1/4	BGM-10-3080	1-1/4 BSP.F	BGM-10-2090	1-1/4 NPT	8.4(18.5)
	BGM-10X-20	Rc 1-1/2	BGM-10X-3080	1-1/2 BSP.F	BGM-10X-2090	1-1/2 NPT	10.3(22.7)

- Sub-plates are available. Specify the sub-plate model number from the table above. When sub-plates are not used, the mounting surface should have a good machined finish.
- The sub-plates are those for pilot operated relief valves. For dimensions, see page 213.

Option

- **Models with vent restrictor**

The type with a vent restrictor has a vent restrictor in vent types 2B3A and 2B3B added between a relief valve and a solenoid operated directional valve. If prevents shock to the main circuit by gradually lowering the venting pressure in the shift from the set pressure to unloading.
Unloading pressure are the same as without a vent restrictor.

A-BS✻-✻-2B3A

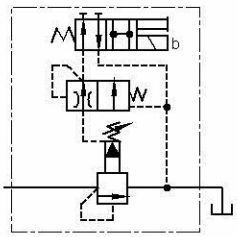

A-BS✻-✻-2B3B

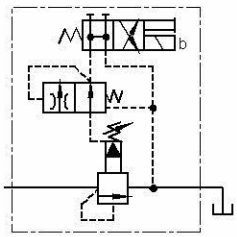

Instructions

- If a remote control relief valve is used in the vent circuit, see page 203. In addition, if the internal volume of the vent line is too large, chattering is likely to occur. Thus, as far as possible reduce the inside diametre and the length of the pipe.
- To adjust the pressure, loosen the lock nut and turn the handle slowly clockwise for higher pressures or anti-clockwise for lower pressures. After adjustments, do not forget to tighten the lock nut.
- Piping of the tank line should not be connected to any tank line of the other valves, but connected directly to the reservoir.
- Pressure is limited by collars fitted. If a working pressure cannot be attained, remove some collars. One collar is equivalent to 10 MPa (1450 PSI).
- With a small flow, the setting pressure may be unstable. Use models numbered 03 and 06 with a flow rate above 8 L/min (2.1 U.S. GPM) and model 10 with 15 L/min (4.0 U.S. GPM).

Interchangeability in Installation between Old and New Design.

Design 48 valve is one on which DSG-01, design 70 is mounted as a pilot valve. It is interchangeable with old design (design 47) with respect to specifications, exterior shape and mounting dimensions.

BST-03-✻-✻-✻-48/4890
BST-06-✻-✻-✻-48/4890
BST-10-✻-✻-✻-48/4890

DIMENSIONS IN MILLIMETRES (INCHES)

● Terminal Box Type

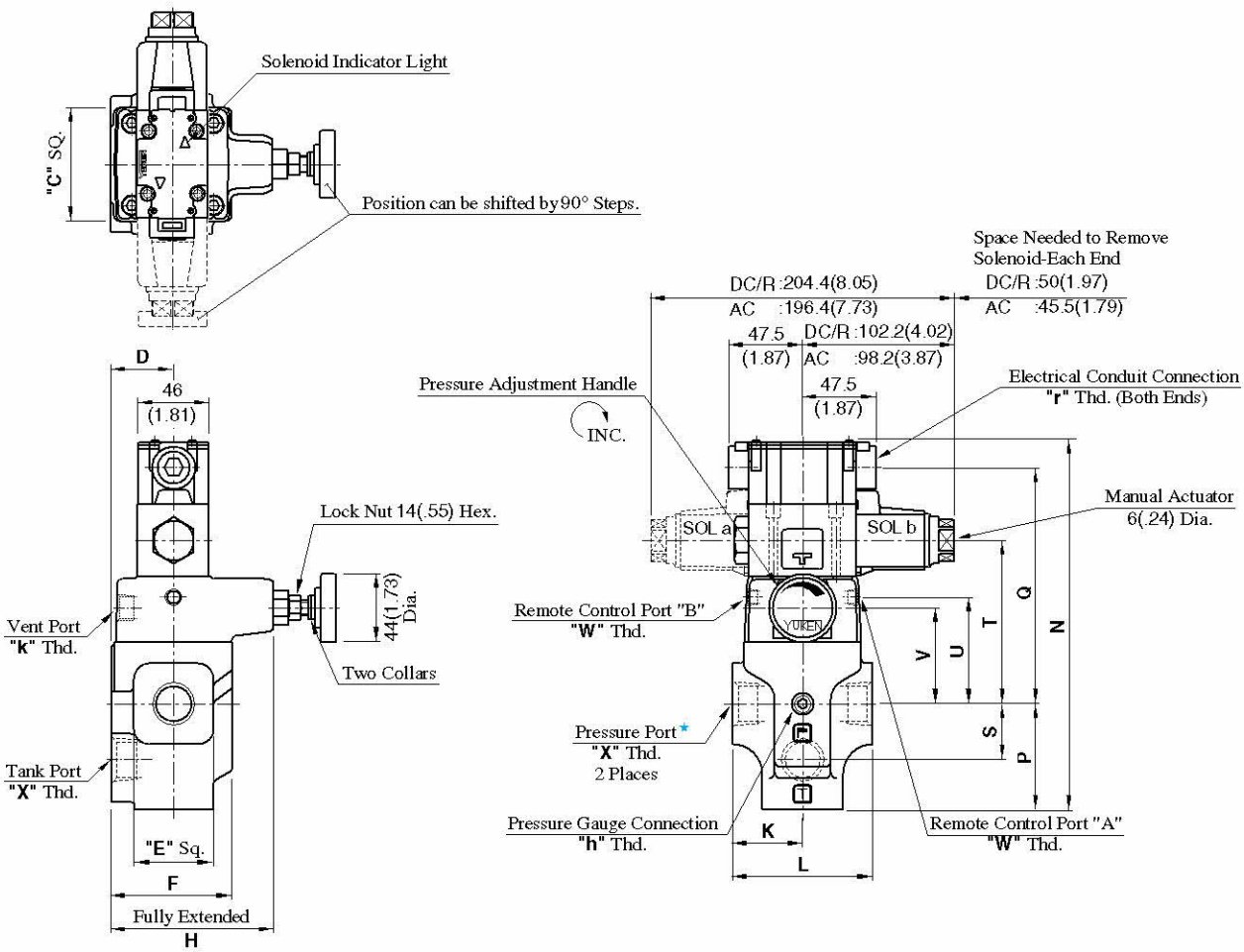

★ There are two threaded connection pressure ports. They can be connected each other in-line; one as inlet and the other as an outlet or the valve can be used by plugging one of the pressure ports.

Model Numbers	Dimensions mm (Inches)													
	C	D	E	F	H	K	L	N	P	Q	S	T	U	V
BST-03-✻-48/4890	75 (2.95)	40 (1.57)	52 (2.05)	78 (3.07)	145 (5.71)	45 (1.77)	90 (3.54)	239.3 (9.42)	68.5 (2.70)	152.5 (6.00)	36 (1.42)	105.5 (4.15)	69 (2.72)	62 (2.44)
BST-06-✻-48/4890														
BST-10-✻-48/4890	85 (3.35)	50 (1.97)	80 (3.15)	96 (3.78)	151 (5.94)	60 (2.36)	120 (4.72)	271.8 (10.70)	89 (3.50)	164.5 (6.48)	49 (1.93)	117.5 (4.63)	81 (3.19)	74 (2.91)

Model Numbers	Japanese Standard "JIS" Design 48					N. American Design Standard Design 4890				
	"W" Thd.	"X" Thd.	"h" Thd.	"k" Thd.	"r" Thd.	"W" Thd.	"X" Thd.	"h" Thd.	"k" Thd.	"r" Thd.
BST-03	Rc 1/8	Rc 3/8	Rc 1/4	Rc 3/8	G 1/2	1/8 NPT	3/8 NPT	1/4 NPT	3/8 NPT	1/2 NPT
BST-06		Rc 3/4					3/4 NPT			
BST-10		Rc 1-1/4					1-1/4 NPT			

● Models with Plug-in Connector

DIMENSIONS IN MILLIMETRES (INCHES)

03
BST-06-✻-✻-✻-N-48/4880/4890
10

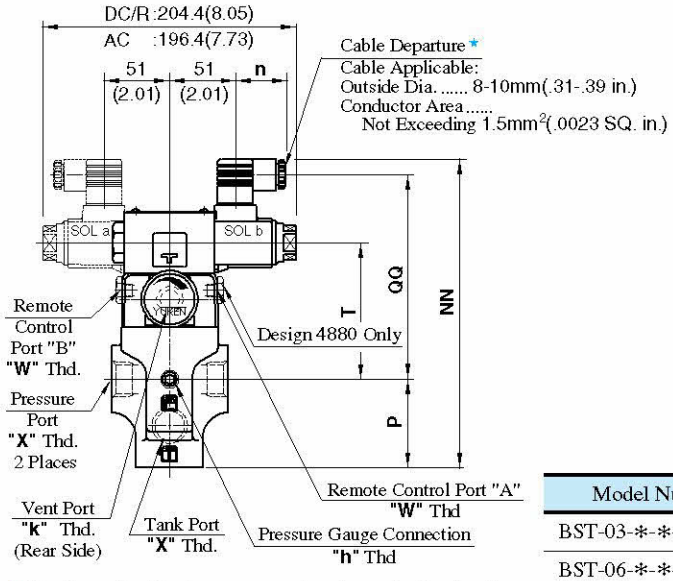

★ Position of cable departure can be changed. For details, refer to DSG-01 valve on page 357.

Model Numbers	Dimensions mm(Inches)				
	P	T	NN	QQ	n
BST-03-✻-A✻-N	68.5 (2.70)	105.5 (4.15)	239 (9.41)	158.5 (6.24)	39 (1.54)
BST-06-✻-A✻-N					
BST-10-✻-A✻-N	89 (3.50)	117.5 (4.63)	271.5 (10.69)	170.5 (6.71)	
BST-03-✻-D✻-N	68.5 (2.70)	105.5 (4.15)	250 (9.84)	169.5 (6.67)	39 (1.54)
BST-06-✻-D✻-N					
BST-10-✻-D✻-N	89 (3.50)	117.5 (4.63)	282.5 (11.12)	181.5 (7.15)	
BST-03-✻-R✻-N	68.5 (2.70)	105.5 (4.15)	253 (9.96)	162.7 (6.41)	53 (2.09)
BST-06-✻-R✻-N					
BST-10-✻-R✻-N	89 (3.50)	117.5 (4.63)	285.5 (11.24)	174.7 (6.88)	

Model Numbers	"W" Thd.	"X" Thd.	"h" Thd.	"k" Thd.
BST-03-✻-✻-✻-N-4880	1/8 BSP.F	3/8 BSP.F	1/4 BSP.Tr	3/8 BSP.Tr
BST-06-✻-✻-✻-N-4880		3/4 BSP.F		
BST-10-✻-✻-✻-N-4880		1-1/4 BSP.F		

See the installation drawing of terminal box type on page 223 for design 48 and 4890 port thread and other dimensions.

■ Options - Models with Vent Restrictor

● Terminal Box Type

03
A-BST-06-✻-2B3A/2B3B-✻-48/4880
10

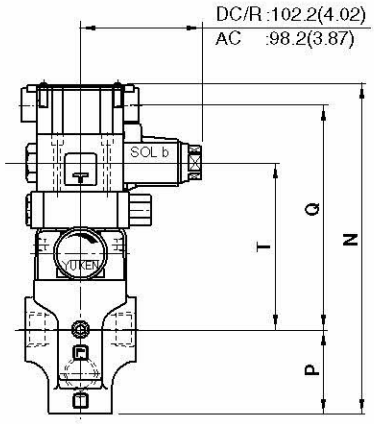

● Plug-in Connector Type

03
A-BST-06-✻-2B3A/2B3B-✻-N-48/4880/4890
10

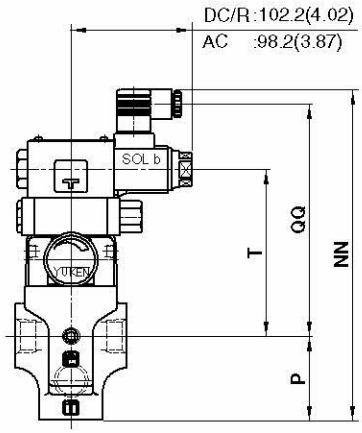

Dimensions mm (Inches) / Model Numbers	P	T	Terminal Box Type		Plug-in Connector Type					
					AC Solenoid		DC Solenoid		R (AC→DC) Solenoid	
			N	Q	NN	QQ	NN	QQ	NN	QQ
A-BST-03	68.5 (2.70)	135.5 (5.33)	269.3 (10.60)	182.5 (7.19)	269 (10.59)	188.5 (7.42)	280 (11.02)	199.5 (7.85)	283 (11.14)	192.7 (7.59)
A-BST-06										
A-BST-10	89 (3.50)	147.5 (5.81)	301.8 (11.88)	194.5 (7.66)	301.5 (11.87)	200.5 (7.89)	312.5 (12.30)	211.5 (8.33)	315.5 (12.42)	204.7 (8.06)

For other dimensions, see the models without vent restrictor type on page 223 and 224.

BSG-03-✻-✻-✻-48/4890
BSG-06-✻-✻-✻-48/4890
BSG-10-✻-✻-✻-48/4890

Mounting surface
BSG-03: ISO 6264-AR-06-2-A
BSG-06: ISO 6264-AS-08-2-A
BSG-10: ISO 6264-AT-10-2-A

DIMENSIONS IN MILLIMETRES (INCHES)

● **Terminal Box Type**

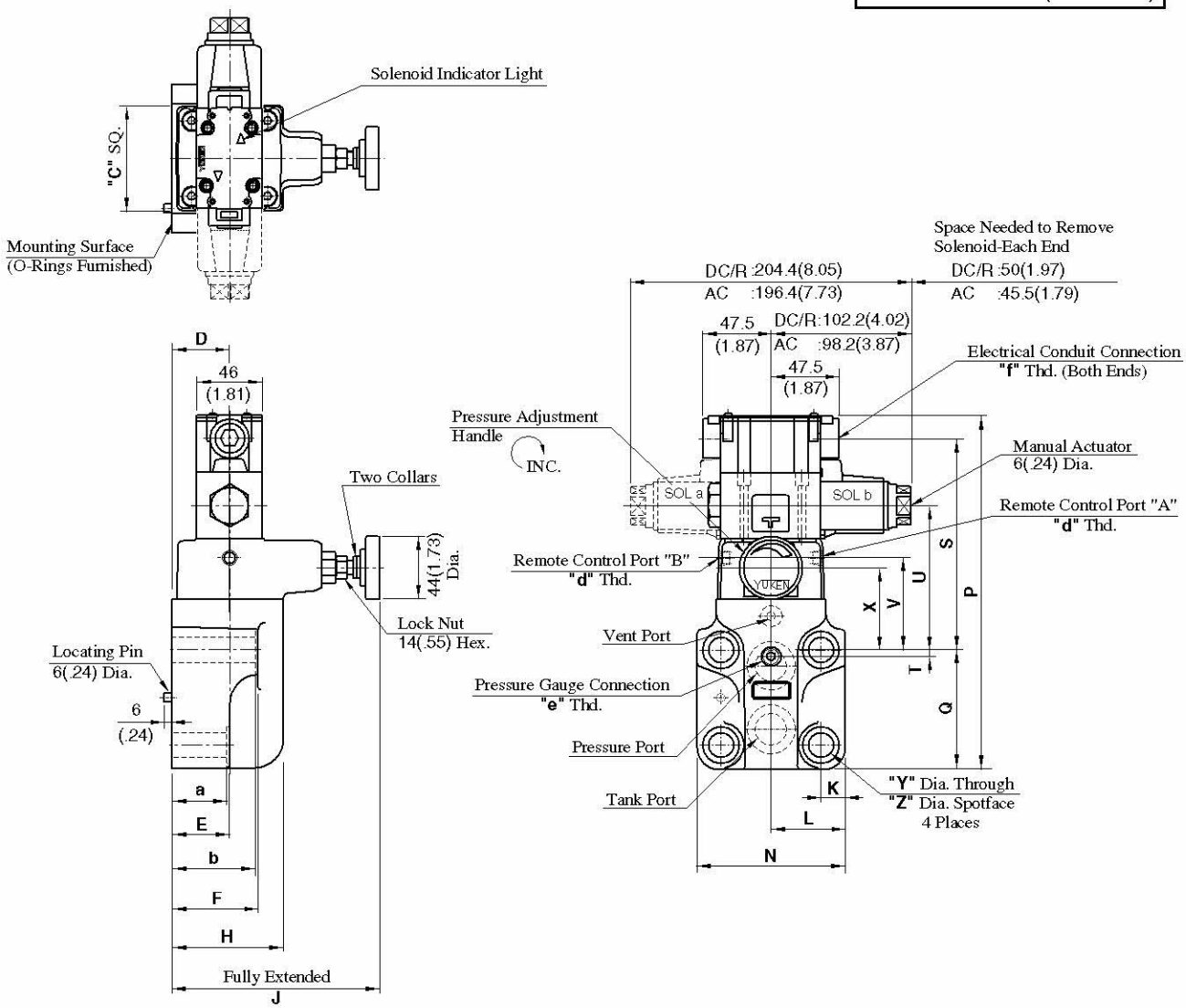

Model Numbers	Dimensions mm (Inches)																			
	C	D	E	F	H	J	K	L	N	P	Q	S	T	U	V	X	Y	Z	a	b
BSG-03	75 (2.95)	40 (1.57)	57 (2.24)	78 (3.07)	78 (3.07)	145 (5.71)	14.1 (.56)	41 (1.61)	82 (3.23)	225.8 (8.89)	77 (3.03)	130.5 (5.14)	22 (.87)	83.5 (3.29)	47 (1.85)	40 (1.57)	13.5 (.53)	21 (.83)	55 (2.17)	77 (3.03)
BSG-06	75 (2.95)	40 (1.57)	40 (1.57)	60 (2.36)	78 (3.07)	145 (5.71)	17 (.67)	52 (2.05)	104 (4.09)	249.8 (9.83)	83.5 (3.29)	148 (5.83)	4.5 (.18)	101 (3.98)	64.5 (2.54)	57.5 (2.26)	17.5 (.69)	26 (1.02)	38 (1.50)	58 (2.28)
BSG-10	85 (3.35)	45 (1.77)	47 (1.85)	67 (2.64)	84 (3.31)	146 (5.75)	20.7 (.81)	62 (2.44)	124 (4.88)	283.8 (11.17)	110 (4.33)	155.5 (6.12)	6 (.24)	108.5 (4.27)	72 (2.83)	65 (2.56)	21.5 (.85)	32 (1.26)	45 (1.77)	65 (2.56)

Model Numbers	Japanese Standard "JIS" Design 48			N. American Design Standard Design 4890		
	"d" Thd.	"e" Thd.	"f" Thd.	"d" Thd.	"e" Thd.	"f" Thd.
BSG-03	Rc 1/8	Rc 1/4	G 1/2	1/8 NPT	1/4 NPT	1/2 NPT
BSG-06						
BSG-10						

Note: For dimensions of the valve mounting surface, see the installation drawing (P. 213) of the sub-plate used together.

● **Models with Plug-in Connector**

03
BSG-06-✻-✻-✻-N-48/4880/4890
10

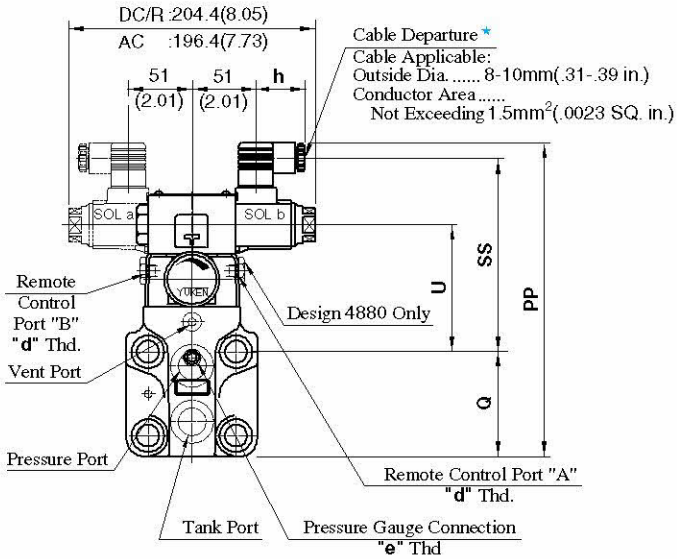

★ Position of cable departure can be changed. For details, refer to DSG-01 valve on page 357.

Model Numbers	Dimensions mm(Inches)				
	Q	U	PP	SS	h
BSG-03-✻-A✻-N	77 (3.03)	83.5 (3.29)	225.5 (8.88)	136.5 (5.37)	39 (1.54)
BSG-06-✻-A✻-N	83.5 (3.29)	101 (3.98)	249.5 (9.82)	154 (6.06)	
BSG-10-✻-A✻-N	110 (4.33)	108.5 (4.27)	283.5 (11.16)	161.5 (6.36)	
BSG-03-✻-D✻-N	77 (3.03)	83.5 (3.29)	236.5 (9.31)	147.5 (5.81)	39 (1.54)
BSG-06-✻-D✻-N	83.5 (3.29)	101 (3.98)	260.5 (10.26)	165 (6.50)	
BSG-10-✻-D✻-N	110 (4.33)	108.5 (4.27)	294.5 (11.59)	172.5 (6.79)	
BSG-03-✻-R✻-N	77 (3.03)	83.5 (3.29)	239.5 (9.43)	140.7 (5.54)	53 (2.09)
BSG-06-✻-R✻-N	83.5 (3.29)	101 (3.98)	263.5 (10.37)	158.2 (6.23)	
BSG-10-✻-R✻-N	110 (4.33)	108.5 (4.27)	297.5 (11.71)	165.7 (6.52)	

Model Numbers	"d" Thd.	"e" Thd.
BSG-03-✻-✻-✻-N-4880	1/8 BSP.F	1/4 BSP.Tr
BSG-06-✻-✻-✻-N-4880		
BSG-10-✻-✻-✻-N-4880		

See the installation drawing of terminal box type on page 225 for design 48 and 4890 port threads and other dimensions.

DIMENSIONS IN MILLIMETRES (INCHES)

■ Options - Models with Vent Restrictor

● **Terminal Box Type**

03
A-BSG-06-✻-2B3A/2B3B-✻-48/4890
10

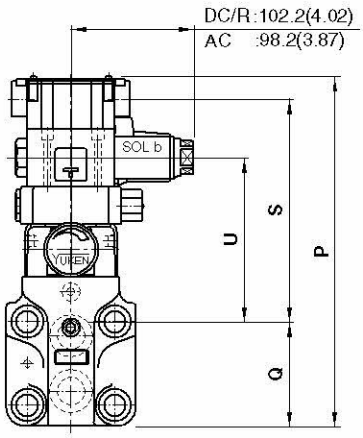

● **Plug-in Connector Type**

03
A-BSG-06-✻-2B3A/2B3B-✻-N-48/4880/4890
10

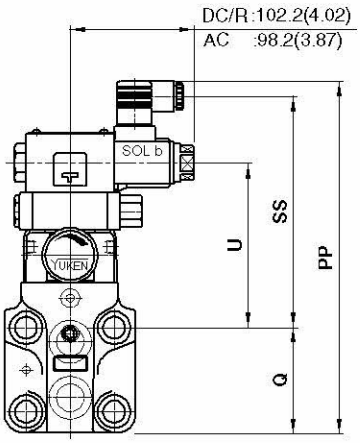

Dimensions mm (Inches) / Model Numbers	Q	U	Terminal Box Type		Plug-in Connector Type					
					AC Solenoid		DC Solenoid		R (AC •DC) Solenoid	
			P	S	PP	SS	PP	SS	PP	SS
A-BSG-03	77 (3.03)	113.5 (4.47)	255.8 (10.07)	160.5 (6.32)	255.5 (10.06)	166.5 (6.56)	266.5 (10.49)	177.5 (6.99)	269.5 (10.61)	170.7 (6.72)
A-BSG-06	83.5 (3.29)	131 (5.16)	279.8 (11.02)	178 (7.01)	279.5 (11.00)	184 (7.24)	290.5 (11.44)	195 (7.68)	293.5 (11.56)	188.2 (7.41)
A-BSG-10	110 (4.33)	138.5 (5.45)	313.8 (12.35)	185.5 (7.30)	313.5 (12.34)	191.5 (7.54)	324.5 (12.78)	202.5 (7.97)	327.5 (12.89)	195.7 (7.70)

For other dimensions, see the models without vent restrictor type on page 225 and 226.

Spare Parts List

Threaded Connections

● Terminal Box Type

03
BST-06-✻-✻-✻-48/4890
10

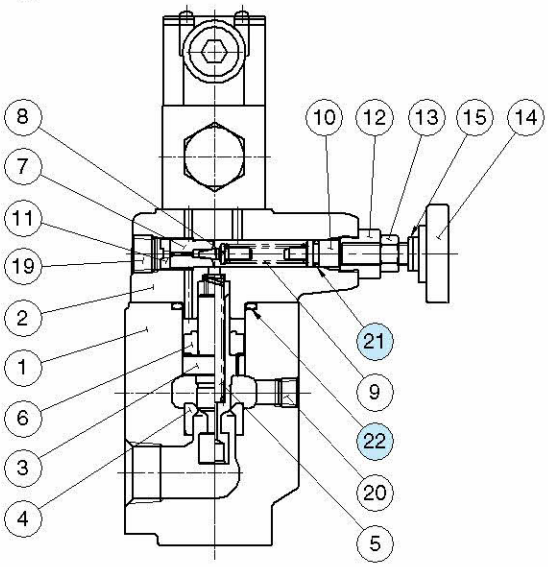

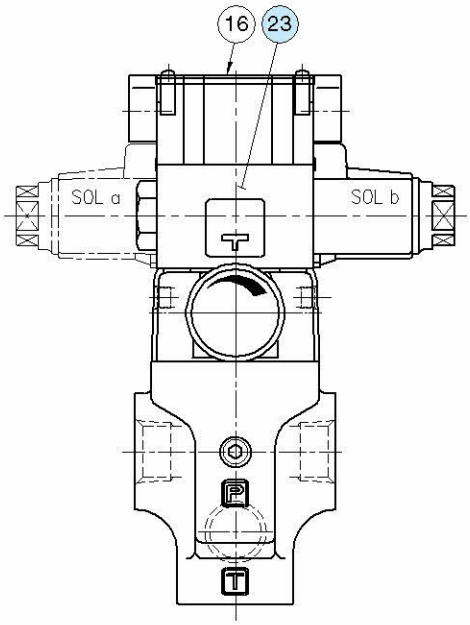

● Models with Plug-in Connector

03
BST-06-✻-✻-✻-N-48/4880/4890
10

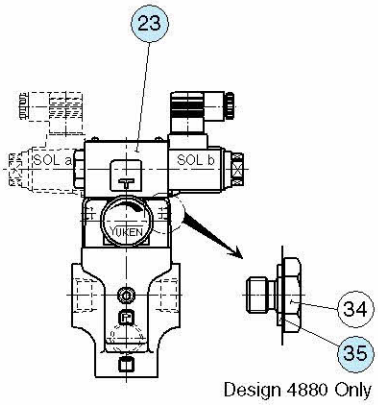

Option

● Models with Vent Restrictor

03
A-BST-06-✻-✻-✻-48/4890
10
N-48/4880/4890

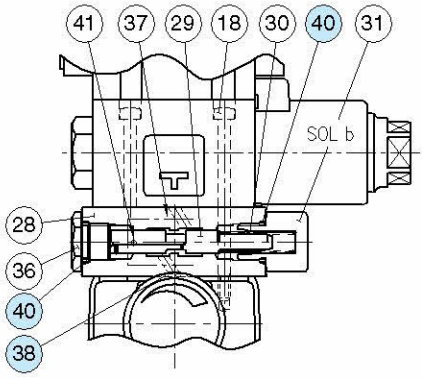

● List of Seals

Item	Name of Parts	Part Numbers			Qty.
		BST-03	BST-06	BST-10	
21	O-Ring	SO-NA-P9		SO-NA-P9	1
22	O-Ring	SO-NB-P32		SO-NB-P42	1
35	Bonded Seal	SG-FB-1/8		SG-FB-1/8	2
38★	O-Ring	SO-NB-P8			2
40★	O-Ring	SO-NB-P14			2

★The O-Rings for Item 38,40 are used only for the models with the vent restrictor.

Note: When ordering the seals, please specify the seal kit number from the table right. In addition to the above seals, seals for the pilot valves are included in the seal kit.
For the detail of the pilot valve seals, see the page 359.

● List of Seal Kits

Valve Model Numbers	Seal Kit Numbers
BST-03	KS-BST-03-48
BST-06	
BST-10	KS-BST-10-48
A-BST-03	KS-A-BST-03-48
A-BST-06	
A-BST-10	KS-A-BST-10-48

Note: No bonded seals are included in the seal kits.

● Pilot Valves

See page 229 for the pilot valve model numbers to be used.

Spare Parts List

Sub-plate Mounting

● Terminal Box Type

03
BSG-06-✻-✻-✻-48/4890
10

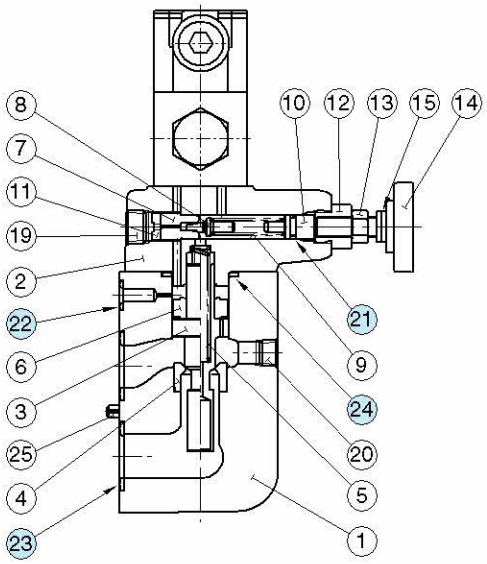

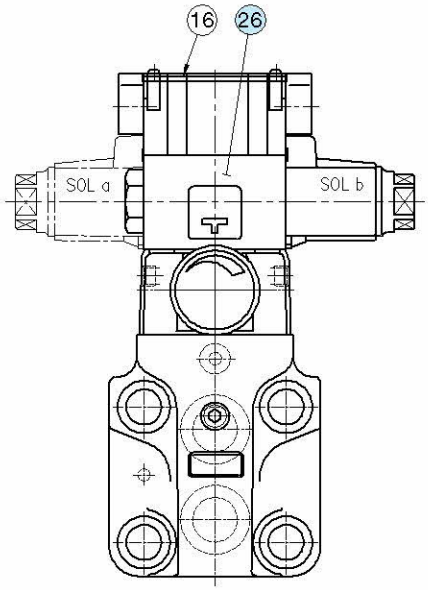

● Models with Plug-in Connector

03
BSG-06-✻-✻-✻-N-48/4880/4890
10

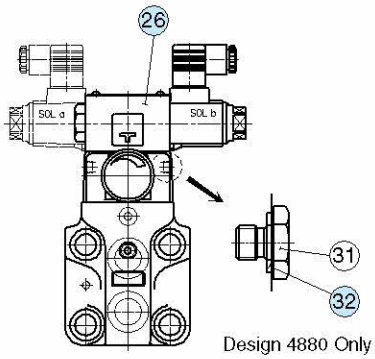

Option

● Models with Vent Restrictor

03
A-BSG-06-✻-✻-✻-48/4890
10 N-48/4880/4890

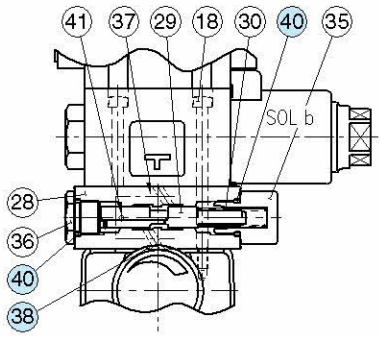

● List of Seals

Item	Name of Parts	Part Numbers			Qty.
		BSG-03	BSG-06	BSG-10	
21	O-Ring	SO-NA-P9	SO-NA-P9	SO-NA-P9	1
22	O-Ring	SO-NB-P9	SO-NB-P11	SO-NB-P9	1
23	O-Ring	SO-NB-P18	SO-NB-P28	SO-NB-P32	2
24	O-Ring	SO-NB-P32	SO-NB-P32	SO-NB-P42	1
32	Bonded Seal	SG-FB-1/8	SG-FB-1/8	SG-FB-1/8	2
38★	O-Ring	SO-NB-P8			2
40★	O-Ring	SO-NB-P14			2

★The O-Rings for item 38, 40 are used only for the models with the vent restrictor.

Note: When ordering the seals, please specify the seal kit number from the table right. In addition to the above seals, seals for the pilot valves are included in the seal kit.
For the detail of the pilot valve seals, see page 359.

● List of Seal Kits

Valve Model Numbers	Seal Kit Numbers
BSG-03	KS-BSG-03-48
BSG-06	KS-BSG-06-48
BSG-10	KS-BSG-10-48
A-BSG-03	KS-A-BSG-03-48
A-BSG-06	KS-A-BSG-06-48
A-BSG-10	KS-A-BSG-10-48

Note: No bonded seals are included in the seal kits.

● Pilot Valves

See page 229 for the pilot valve model numbers to be used.

Spare Parts List

List of Pilot Valves

Type of Electrical Conduit Connection	Valve Model Numbers	Pilot Valve Model Numbers	Remarks
Terminal Box Type	∗-BST/BSG-03/06/10-∗-2B3A-★-48	DSG-01-2B3A-★-70	Japanese Standard "JIS"
	∗-BST/BSG-03/06/10-∗-2B3B-★-48	DSG-01-2B3B-★-70	
	∗-BST/BSG-03/06/10-∗-2B2B-★-48	DSG-01-2B2B-★-70	
	∗-BST/BSG-03/06/10-∗-2B2-★-48	DSG-01-2B2-★-70	
	∗-BST/BSG-03/06/10-∗-3C2-★-48	DSG-01-3C2-★-70	
	∗-BST/BSG-03/06/10-∗-3C3-★-48	DSG-01-3C3-★-70	
	∗-BST/BSG-03/06/10-∗-2B3A-★-4890	DSG-01-2B3A-★-7090	N. American Design Std.
	∗-BST/BSG-03/06/10-∗-2B3B-★-4890	DSG-01-2B3B-★-7090	
	∗-BST/BSG-03/06/10-∗-2B2B-★-4890	DSG-01-2B2B-★-7090	
	∗-BST/BSG-03/06/10-∗-2B2-★-4890	DSG-01-2B2-★-7090	
	∗-BST/BSG-03/06/10-∗-3C2-★-4890	DSG-01-3C2-★-7090	
	∗-BST/BSG-03/06/10-∗-3C3-★-4890	DSG-01-3C3-★-7090	
Plug-in Connector Type	∗-BST/BSG-03/06/10-∗-2B3A-★-N-48	DSG-01-2B3A-★-N-70	Japanese Standard "JIS"
	∗-BST/BSG-03/06/10-∗-2B3B-★-N-48	DSG-01-2B3B-★-N-70	
	∗-BST/BSG-03/06/10-∗-2B2B-★-N-48	DSG-01-2B2B-★-N-70	
	∗-BST/BSG-03/06/10-∗-2B2-★-N-48	DSG-01-2B2-★-N-70	
	∗-BST/BSG-03/06/10-∗-3C2-★-N-48	DSG-01-3C2-★-N-70	
	∗-BST/BSG-03/06/10-∗-3C3-★-N-48	DSG-01-3C3-★-N-70	
	∗-BST/BSG-03/06/10-∗-2B3A-★-N-4880	DSG-01-2B3A-★-N-70	European Design Std.
	∗-BST/BSG-03/06/10-∗-2B3B-★-N-4880	DSG-01-2B3B-★-N-70	
	∗-BST/BSG-03/06/10-∗-2B2B-★-N-4880	DSG-01-2B2B-★-N-70	
	∗-BST/BSG-03/06/10-∗-2B2-★-N-4880	DSG-01-2B2-★-N-70	
	∗-BST/BSG-03/06/10-∗-3C2-★-N-4880	DSG-01-3C2-★-N-70	
	∗-BST/BSG-03/06/10-∗-3C3-★-N-4880	DSG-01-3C3-★-N-70	
	∗-BST/BSG-03/06/10-∗-2B3A-★-N-4890	DSG-01-2B3A-★-N-7090	N. American Design Std.
	∗-BST/BSG-03/06/10-∗-2B3B-★-N-4890	DSG-01-2B3B-★-N-7090	
	∗-BST/BSG-03/06/10-∗-2B2B-★-N-4890	DSG-01-2B2B-★-N-7090	
	∗-BST/BSG-03/06/10-∗-2B2-★-N-4890	DSG-01-2B2-★-N-7090	
	∗-BST/BSG-03/06/10-∗-3C2-★-N-4890	DSG-01-3C2-★-N-7090	
	∗-BST/BSG-03/06/10-∗-3C3-★-N-4890	DSG-01-3C3-★-N-7090	

Note: 1. Fill a coil type (a symbol representing current/voltage) in section marked ★.
2. For the details of the pilot valves, see page 359.

Low Noise Type Solenoid Controlled Relief Valves

The low-noise solenoid controlled relief valve is a combination of a low-noise type pilot operated relief valve and a solenoid operated directional valve. It is used for no-load pump operation by using electric signals or, together with a remote control relief valve, for two or three pressure control of the hydraulic system.

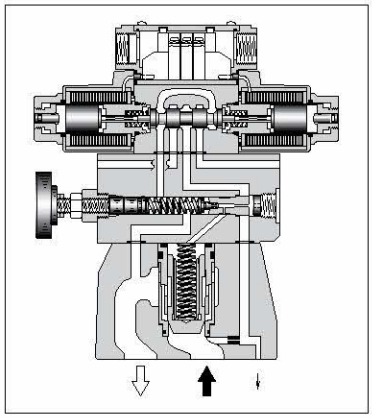

Specifications

Model Numbers	Max. Operating Pressure MPa (PSI)	Pressure Adj. Range MPa (PSI)	Max. Flow L/min (U.S.GPM)	Approx. Mass kg (lbs.)		
				Double Sol.	Single Sol.	With Vent Restrictor
S-BSG-03-*-*-*-*-53*	25 (3630)	★ - 25 (★ - 3630)	100 (26.4)	6.0 (13.2)	5.5 (12.1)	6.5 (14.3)
S-BSG-06-*-*-*-*-53*			200 (52.8)	6.9 (15.2)	6.4 (14.1)	7.4 (16.3)
S-BSG-10-*-*-*-*-53*			400 (106)	12.6 (27.8)	12.1 (26.7)	12.9 (28.4)

★For relief valves, low-noise type pilot operated relief valves are used.
For minimum adjustment pressures and other characteristics, see page 218.

Model Number Designation

F-	A-	S-	BS	G	-03	-V	-2B3A	-A100	-N	-L	53	*
Special Seals	With Vent Restrictor	Low Noise Type	Series Number	Type of Mtg.	Valve size	High Venting Pres. Feature	Vent Type	Coil Type	Type of Electrical Connections	Direction of Handle	Design Number	Design Standards
F: Special Seals for Phosphate Ester Type Fluids (Omit if not required)	**A:** ★1 With Vent Restrictor (Option-Omit if not required)	**S:** Low Noise Type	**BS:** Solenoid Controlled Relief Valves	**G:** Sub-plate Mtg.	**03**	**V:** ★2 For High Venting Pressure Feature (Omit if not required)	★3 **2B3A** **2B3B** **2B2B** **2B2** **3C2** **3C3**	AC: ★4 **A100** **A120** **A200** **A240** DC: **D12** **D24** **D48** AC →DC: **R100** **R200**	**None:** Terminal Box Type **N:** With Plug-in Connector (DIN)	Viewed from pressure gauge connection **L:** Left (Normal) **R:** Right	**53**	**None:** Japanese Std. "JIS" **90:** N. American Design Std.
					06				**N:** With Plug-in Connector (DIN)	———		**80:** European Design Std.
					10							

★1. Models with vent restrictor are applicable only for the vent type 2B3A and 2B3B. For details, see page 231.
★2. Use high venting pressure types to reduce response time from unloading to onloading.
★3. The vent types are the same as for the conventional type solenoid controlled relief valves. For the details of the vent types, see page 221.
★4. The coil codes are the same as for solenoid operated directional valve DSG-01 valve. See the solenoid ratings on page 345.

The coil type numbers in the shaded column are handled as optional extras. In case these coils are required to be chosen, please confirm the time of delivery with us before ordering.

Option

- **Models with vent restrictor**

The type with a vent restrictor has a vent restrictor in vent types 2B3A and 2B3B added between a relief valve and a solenoid operated directional valve. It prevents shock to the main circuit by gradually lowering the venting pressure in the shift from the setting pressure to unloading.
Unloading pressures are the same as without a vent restrictor.

A-S-BSG-✻-2B3A

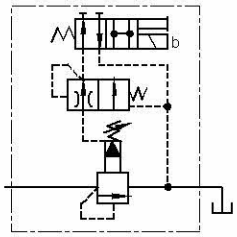

A-S-BSG-✻-2B3B

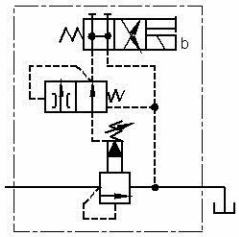

Sub-plate

Valve Model Numbers	Japanese Standard "JIS"		European Design Standard		N. American Design Standard		Approx. Mass kg (lbs.)
	Sub-plate Model Numbers	Thread Size	Sub-plate Model Numbers	Thread Size	Sub-plate Model Numbers	Thread Size	
S-BSG-03	BGM-03-20	Rc 3/8	BGM-03-3080	3/8 BSP.F	BGM-03-2090	3/8 NPT	2.4(5.3)
	BGM-03X-20	Rc 1/2	BGM-03X-3080	1/2 BSP.F	BGM-03X-2090	1/2 NPT	3.1(6.8)
S-BSG-06	BGM-06-20	Rc 3/4	BGM-06-3080	3/4 BSP.F	BGM-06-2090	3/4 NPT	4.7(10.4)
	BGM-06X-20	Rc 1	BGM-06X-3080	1 BSP.F	BGM-06X-2090	1 NPT	5.7(12.6)
S-BSG-10	BGM-10-20	Rc 1-1/4	BGM-10-3080	1-1/4 BSP.F	BGM-10-2090	1-1/4 NPT	8.4(18.5)
	BGM-10X-20	Rc 1-1/2	BGM-10X-3080	1-1/2 BSP.F	BGM-10X-2090	1-1/2 NPT	10.3(22.7)

- Sub-plates are available. Specify the sub-plate model number from the table above. When sub-plates are not used, the mounting surface should have a good machined finish.
- The sub-plates are those for pilot operated relief valves. For dimensions, see page 213.

Attachment

- **Mounting Bolts**

Valve Model Numbers	Socket Head Cap Screw		Qty.
	Japanese Std. "JIS" and European Design Std.	N. American Design Std.	
S-BSG-03	M12×40 Lg.	1/2-13 UNC×1-1/2 Lg.	4
S-BSG-06	M16×50 Lg.	5/8-11 UNC×2 Lg.	4
S-BSG-10	M20×60 Lg.	3/4-10 UNC×2-1/4 Lg.	4

Instructions

- If a remote control relief valve is used in the vent circuit, see page 203. In addition, if the internal volume of the vent line is too large, chattering is likely to occur. Thus, as far as possible reduce the inside diametre and the length of the pipe.
- To adjust the pressure, loosen the lock nut and turn the handle slowly clockwise for higher pressures or anti-clockwise for lower pressures. After adjustments, do not forget to tighten the lock nut.
- Piping of the tank line should not be connected to any tank line of the other valves, but connected directly to the reservoir.
- Pressure is limited by collars fitted. If a working pressure cannot be attained, remove some collars. One collar is equivalent to 10 MPa (1450 PSI).
- With a small flow, the setting pressure may be unstable. Use models numbered 03 and 06 with a flow rate above 5 L/min (1.3 U.S. GPM) and model 10 with 8 L/min (2.1 U.S. GPM).

Interchangeability in Installation between Old and New Design.

Design 53 valve is one on which DSG-01, design 70 is mounted as a pilot valve. It is interchangeable with old design (design 52) with respect to specifications, exterior shape and mounting dimensions.

Terminal Box Type

Mounting surface
S-BSG-03: ISO 6264-AR-06-2-A
S-BSG-06: ISO 6264-AS-08-2-A
S-BSG-10: ISO 6264-AT-10-2-A

Opposite Handle Position

S-BSG-03/06-✻-✻-✻-✻-R-53/5390

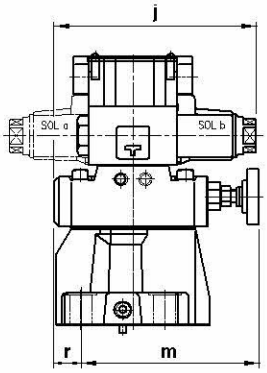

Note: For other dimensions, see the figures shown below.

S-BSG-03/06-✻-✻-✻-✻-L-53/5390
S-BSG-10-✻-✻-✻-✻-53/5390

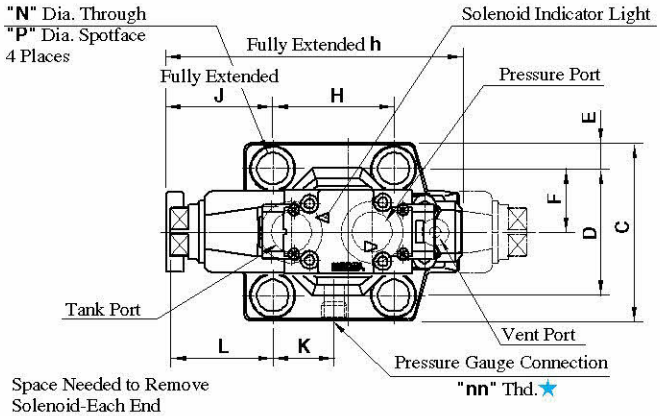

Electrical Conduit Connection

Design Std.	Thd. Size
53	G 1/2
5390	1/2 NPT

Both Ends

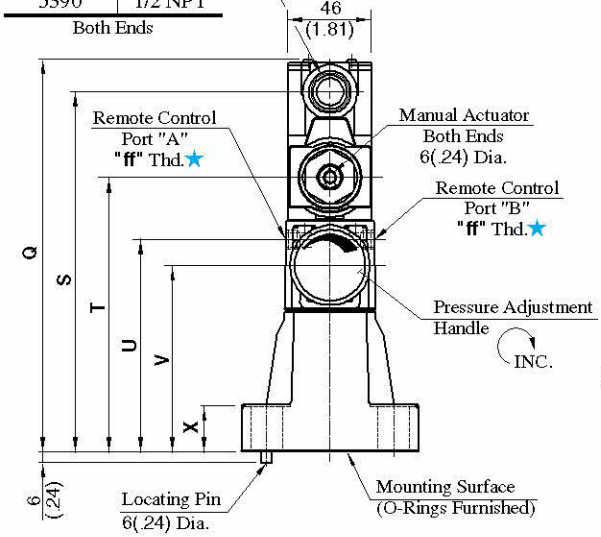

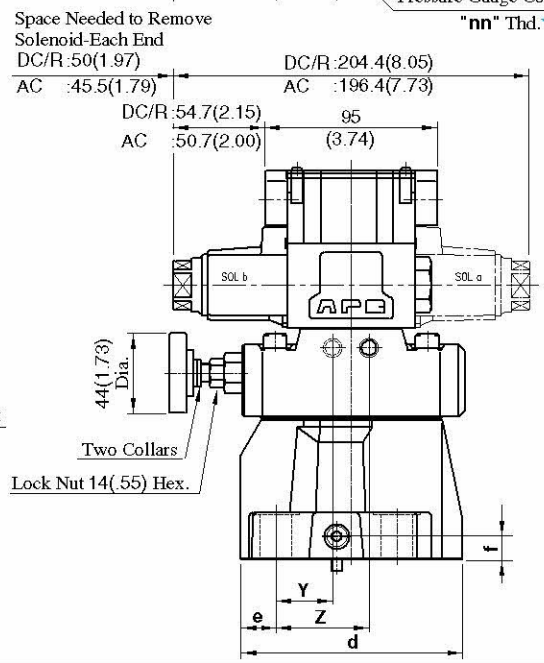

Model Numbers	Dimensions mm (Inches)																						
	C	D	E	F	H	J	K	N	P	Q	S	T	U	V	X	Y	Z	d	e	f	h	m	r
S-BSG-03	76 (2.99)	53.8 (2.12)	11.1 (.44)	26.9 (1.06)	53.8 (2.12)	73.6 (2.90)	26.9 (1.06)	13.5 (.53)	21 (.83)	216.8 (8.54)	198.5 (7.81)	151.5 (5.96)	117 (4.61)	103 (4.06)	21.5 (.85)	17.1 (.67)	36.6 (1.44)	106 (4.17)	26.1 (1.03)	13 (.51)	163.5 (6.44)	127.4 (5.02)	36.1 (1.42)
S-BSG-06	98 (3.86)	70 (2.76)	14 (.55)	35 (1.38)	66.7 (2.63)	58.8 (2.31)	33.7 (1.33)	17.5 (.69)	26 (1.02)	216.8 (8.54)	198.5 (7.81)	151.5 (5.96)	117 (4.61)	103 (4.06)	26 (1.02)	31.9 (1.26)	51.4 (2.02)	122 (4.80)	19.3 (.76)	13 (.51)	163.5 (6.44)	142.2 (5.60)	21.3 (.84)
S-BSG-10	120 (4.72)	82.6 (3.25)	18.7 (.74)	41.3 (1.63)	88.9 (3.50)	46.1 (1.81)	44.9 (1.77)	21.5 (.85)	32 (1.26)	251.8 (9.91)	233.5 (9.19)	186.5 (7.34)	149 (5.87)	135 (5.31)	33.5 (1.32)	43.2 (1.70)	62.7 (2.47)	155 (6.10)	21.1 (.83)	18 (.71)	180 (7.09)	—	—

Model Numbers \ Dimensions mm (Inches)	AC Solenoid		DC/R Solenoid	
	L	j	L	j
S-BSG-03	71.3 (2.81)	161.2 (6.35)	75.3 (2.96)	165.2 (6.50)
S-BSG-06	56.5 (2.22)	161.2 (6.35)	60.5 (2.38)	165.2 (6.50)
S-BSG-10	44.3 (1.74)	———	48.3 (1.90)	———

DIMENSIONS IN MILLIMETRES (INCHES)

★ For the port screws, see the Plug-in Connector type on page 233.

Note: For dimensions of the valve mounting surface, see the installation drawing (P. 213) of the sub-plate used together.

Plug-in Connector Type

S-BSG-$\frac{03}{06}$-✻-✻-✻-N-L-53/5380/5390

S-BSG-10-✻-✻-✻-N-L-53/5380/5390

DIMENSIONS IN MILLIMETRES (INCHES)

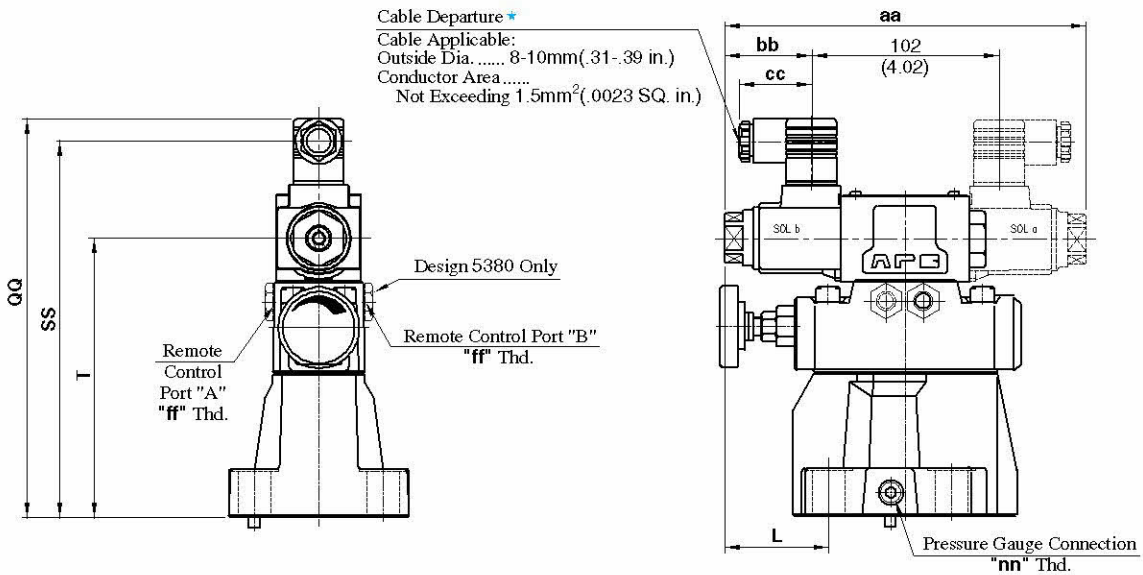

★ Position of cable departure can be changed. For details, refer to DSG-01 valve on page 357.

Model Numbers	Dimensions mm (Inches)							Remarks
	L	QQ	SS	T	aa	bb	cc	
S-BSG-03-✻-✻-A✻-N	71.3 (2.81)	216.5 (8.52)	204.5 (8.05)	151.5 (5.96)	196.4 (7.73)	47.2 (1.86)	39 (1.54)	With AC Solenoid
S-BSG-06-✻-✻-A✻-N	56.5 (2.22)	216.5 (8.52)	204.5 (8.05)	151.5 (5.96)				
S-BSG-10-✻-✻-A✻-N	44.3 (1.74)	251.5 (9.90)	239.5 (9.43)	186.5 (7.34)				
S-BSG-03-✻-✻-D✻-N	75.3 (2.96)	227.5 (8.96)	215.5 (8.48)	151.5 (5.96)	204.4 (8.05)	51.2 (2.02)	39 (1.54)	With DC Solenoid
S-BSG-06-✻-✻-D✻-N	60.5 (2.38)	227.5 (8.96)	215.5 (8.48)	151.5 (5.96)				
S-BSG-10-✻-✻-D✻-N	48.3 (1.90)	262.5 (10.33)	250.5 (9.86)	186.5 (7.34)				
S-BSG-03-✻-✻-R✻-N	75.3 (2.96)	230.5 (9.07)	208.7 (8.22)	151.5 (5.96)	204.4 (8.05)	51.2 (2.02)	53 (2.09)	With AC → DC Solenoid
S-BSG-06-✻-✻-R✻-N	60.5 (2.38)	230.5 (9.07)	208.7 (8.22)	151.5 (5.96)				
S-BSG-10-✻-✻-R✻-N	48.3 (1.90)	265.5 (10.45)	243.7 (9.59)	186.5 (7.34)				

Model Numbers	Thread Size					
	Japanese Standard "JIS" Design 53		European Design Standard Design 5380		N. American Design Standard Design 5390	
	"ff" Thd.	"nn" Thd.	"ff" Thd.	"nn" Thd.	"ff" Thd.	"nn" Thd.
S-BSG-03-✻-✻-✻-N	Rc 1/8	Rc 1/4	1/8 BSP.F	1/4 BSP.F	1/8 NPT	1/4 NPT
S-BSG-06-✻-✻-✻-N						
S-BSG-10-✻-✻-✻-N						

Options-Models with Vent Restrictor

DIMENSIONS IN MILLIMETRES (INCHES)

Terminal Box Type

A-S-BSG-$^{03}_{06}$-✻-✻-✻-L-53/5390

A-S-BSG-10-✻-✻-✻-53/5390

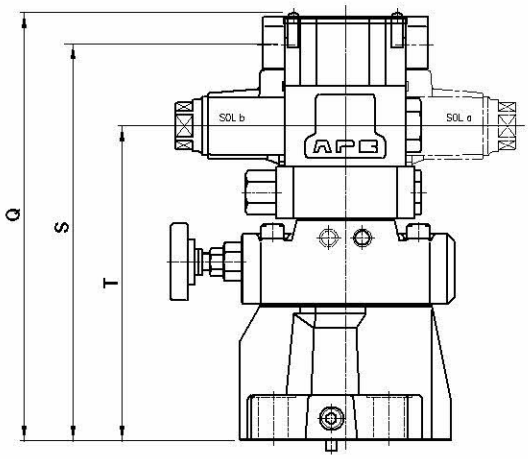

Plug-in Connector Type

A-S-BSG-$^{03}_{06}$-✻-✻-✻-N-L-53/5380/5390

A-S-BSG-10-✻-✻-✻-N-53/5380/5390

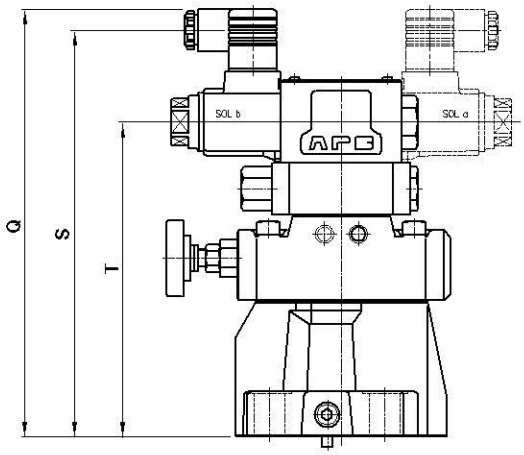

Model Numbers	Dimensions mm (Inches)			Remarks
	Q	S	T	
A-S-BSG-03-✻-✻-A✻/D✻/R✻-L	246.8(9.72)	228.5(9.00)	181.5(7.15)	Terminal Box Type
A-S-BSG-06-✻-✻-A✻/D✻/R✻-L				
A-S-BSG-10-✻-✻-A✻/D✻/R✻	281.8(11.09)	263.5(10.37)	216.5(8.52)	
A-S-BSG-03-✻-✻-A✻-N-L	246.5(9.70)	234.5(9.23)	181.5(7.15)	Plug-in Connector with AC Solenoid
A-S-BSG-06-✻-✻-A✻-N-L				
A-S-BSG-10-✻-✻-A✻-N	281.5(11.08)	269.5(10.61)	216.5(8.52)	
A-S-BSG-03-✻-✻-D✻-N-L	257.5(10.14)	245.5(9.67)	181.5(7.15)	Plug-in Connector with DC Solenoid
A-S-BSG-06-✻-✻-D✻-N-L				
A-S-BSG-10-✻-✻-D✻-N	292.5(11.52)	280.5(11.04)	216.5(8.52)	
A-S-BSG-03-✻-✻-R✻-N-L	260.5(10.26)	238.7(9.40)	181.5(7.15)	Plug-in Connector with R Type Solenoid
A-S-BSG-06-✻-✻-R✻-N-L				
A-S-BSG-10-✻-✻-R✻-N	295.5(11.63)	273.7(10.78)	216.5(8.52)	

Spare Parts List

Terminal Box Type
S-BSG-03,06,10-✻-✻-✻-53/5390

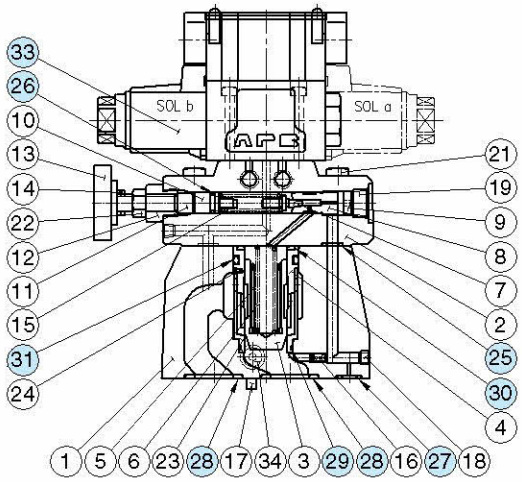

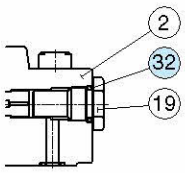

✻-S-BSG-10

Plug-in Connector Type
S-BSG-03,06,10-✻-✻-✻-N-53/5380/5390

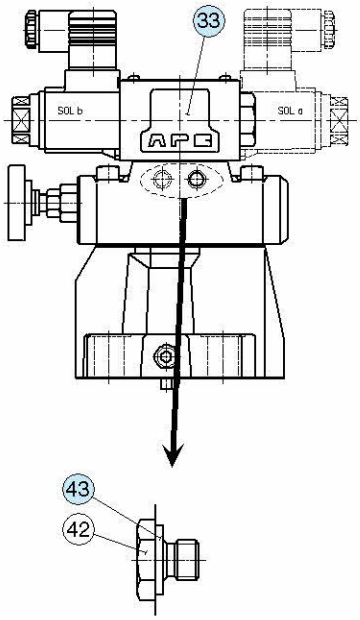

Design 5380 Only

List of Seals

Item	Name of Parts	Part Numbers			Qty.
		S-BSG-03	S-BSG-06	S-BSG-10	
25	O-Ring	SO-NB-P9	SO-NB-P9	SO-NB-P9	2
26	O-Ring	SO-NA-P9	SO-NA-P9	SO-NA-P9	1
27	O-Ring	SO-NB-P9	SO-NB-P11	SO-NB-P9	1
28	O-Ring	SO-NB-P18	SO-NB-P28	SO-NB-P32	2
29	O-Ring	SO-NB-A024	SO-NB-A024	SO-NB-A128	1
30	O-Ring	SO-NB-P28	SO-NB-P28	SO-NB-P36	1
31	O-Ring	SO-NB-P32	SO-NB-P32	SO-NB-P42	1
32	O-Ring	——	——	SO-NB-P14	1
38★	O-Ring	SO-NB-P8			2
40★	O-Ring	SO-NB-P14			2
43	Bonded Seal	SG-FB-1/8	SG-FB-1/8	SG-FB-1/8	2

★ The O-Rings for item 38, 40 are used only for the models with the vent restrictor.

Note: When ordering the seals, please specify the seal kit number from the table right. In addition to the above seals, seals for the pilot valves are included in the seal kit.
For the detail of the pilot valve seals, see page 359.

Option-Models with Vent Restrictor
A-S-BSG-03,06,10-✻-✻-✻-53/5390 N-53/5380/5390

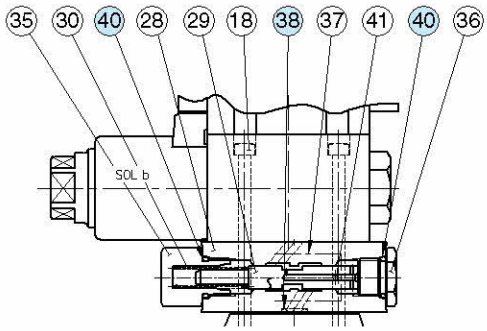

List of Seal Kits

Valve Model Numbers	Seal Kit Numbers
S-BSG-03	KS-S-BSG-03-53
S-BSG-06	KS-S-BSG-06-53
S-BSG-10	KS-S-BSG-10-53
A-S-BSG-03	KS-A-S-BSG-03-53
A-S-BSG-06	KS-A-S-BSG-06-53
A-S-BSG-10	KS-A-S-BSG-10-53

Note: No bonded seals are included in the seal kits.

Pilot Valves
See page 236 for the pilot valve model numbers to be used.

Spare Parts List

List of Pilot Valves

Type of Electrical Conduit Connection	Valve Model Numbers	Pilot Valve Model Numbers	Remarks
Terminal Box Type	∗-S-BSG-03/06/10-∗-2B3A-★-53	DSG-01-2B3A-★-70	Japanese Standard "JIS"
	∗-S-BSG-03/06/10-∗-2B3B-★-53	DSG-01-2B3B-★-70	
	∗-S-BSG-03/06/10-∗-2B2B-★-53	DSG-01-2B2B-★-70	
	∗-S-BSG-03/06/10-∗-2B2-★-53	DSG-01-2B2-★-70	
	∗-S-BSG-03/06/10-∗-3C2-★-53	DSG-01-3C2-★-70	
	∗-S-BSG-03/06/10-∗-3C3-★-53	DSG-01-3C3-★-70	
	∗-S-BSG-03/06/10-∗-2B3A-★-5390	DSG-01-2B3A-★-7090	N. American Design Std.
	∗-S-BSG-03/06/10-∗-2B3B-★-5390	DSG-01-2B3B-★-7090	
	∗-S-BSG-03/06/10-∗-2B2B-★-5390	DSG-01-2B2B-★-7090	
	∗-S-BSG-03/06/10-∗-2B2-★-5390	DSG-01-2B2-★-7090	
	∗-S-BSG-03/06/10-∗-3C2-★-5390	DSG-01-3C2-★-7090	
	∗-S-BSG-03/06/10-∗-3C3-★-5390	DSG-01-3C3-★-7090	
Plug-in Connector Type	∗-S-BSG-03/06/10-∗-2B3A-★-N-53	DSG-01-2B3A-★-N-70	Japanese Standard "JIS"
	∗-S-BSG-03/06/10-∗-2B3B-★-N-53	DSG-01-2B3B-★-N-70	
	∗-S-BSG-03/06/10-∗-2B2B-★-N-53	DSG-01-2B2B-★-N-70	
	∗-S-BSG-03/06/10-∗-2B2-★-N-53	DSG-01-2B2-★-N-70	
	∗-S-BSG-03/06/10-∗-3C2-★-N-53	DSG-01-3C2-★-N-70	
	∗-S-BSG-03/06/10-∗-3C3-★-N-53	DSG-01-3C3-★-N-70	
	∗-S-BSG-03/06/10-∗-2B3A-★-N-5380	DSG-01-2B3A-★-N-70	European Design Std.
	∗-S-BSG-03/06/10-∗-2B3B-★-N-5380	DSG-01-2B3B-★-N-70	
	∗-S-BSG-03/06/10-∗-2B2B-★-N-5380	DSG-01-2B2B-★-N-70	
	∗-S-BSG-03/06/10-∗-2B2-★-N-5380	DSG-01-2B2-★-N-70	
	∗-S-BSG-03/06/10-∗-3C2-★-N-5380	DSG-01-3C2-★-N-70	
	∗-S-BSG-03/06/10-∗-3C3-★-N-5380	DSG-01-3C3-★-N-70	
	∗-S-BSG-03/06/10-∗-2B3A-★-N-5390	DSG-01-2B3A-★-N-7090	N. American Design Std.
	∗-S-BSG-03/06/10-∗-2B3B-★-N-5390	DSG-01-2B3B-★-N-7090	
	∗-S-BSG-03/06/10-∗-2B2B-★-N-5390	DSG-01-2B2B-★-N-7090	
	∗-S-BSG-03/06/10-∗-2B2-★-N-5390	DSG-01-2B2-★-N-7090	
	∗-S-BSG-03/06/10-∗-3C2-★-N-5390	DSG-01-3C2-★-N-7090	
	∗-S-BSG-03/06/10-∗-3C3-★-N-5390	DSG-01-3C3-★-N-7090	

Note: 1. Fill a coil type (a symbol representing current/voltage) in section marked ★.

2. For the details of the pilot valves, see page 359.